YAMAHA

ПЕРЕЧЕНЬ ДАННЫХ

МУЗЫКАЛЬНАЯ РАБОЧАЯ СТАНЦИЯ

MO6
MO8

Содержание

Перечень голосов 2
Перечень голосов ударных инструментов 7
Перечень названий голосов ударных инструментов 7
Перечень назначений наборов ударных инструментов 8
Перечень сигналов 21
Перечень исполнительских стилей 24
Перечень типов эффектов 26
Перечень параметров эффектов 28
Таблица назначения данных эффектам 36
Перечень параметров управления 42
Перечень стилей Multi 42
Перечень типов арпеджио 43
Перечень фраз предварительной настройки 55
Формат данных MIDI 58
Таблица данных MIDI 62
Исполнительная таблица MIDI 78

PRE 1 (MSB=63, LSB=0)

Номер		Название голоса	Категория	Субкатегория
1	A01	Full Grand	Ap	A PIANO
2	A02	BriteGrand	Ap	A PIANO
3	A03	Dark Grand	Ap	A PIANO
4	A04	Tacky	Ap	A PIANO
5	A05	HousePiano	Ap	A PIANO
6	A06	Mono Comp	Ap	A PIANO
7	A07	1968	Ap	A PIANO
8	A08	78rpmPiano	Ap	A PIANO
9	A09	Ragtime	Ap	A PIANO
10	A10	BalladKey	Ap	OTHER
11	A11	PianoBack	Ap	OTHER
12	A12	Piano&Ooh	Ap	OTHER
13	A13	HardCP80	Ap	E GRAND
14	A14	Yama EP's	Kb	E.PIANO
15	A15	DynoStrait	Kb	E.PIANO
16	A16	ChorusHard	Kb	E.PIANO
17	B01	R&B Soft	Kb	E.PIANO
18	B02	Phaser Vin	Kb	E.PIANO
19	B03	Vintage'74	Kb	E.PIANO
20	B04	Sweetness	Kb	E.PIANO
21	B05	Max Tine	Kb	E.PIANO
22	B06	VintagCase	Kb	E.PIANO
23	B07	Contempo	Kb	E.PIANO
24	B08	E.PianoPad	Kb	OTHER
25	B09	SparkleTin	Kb	E.PIANO
26	B10	TX802	Kb	E.PIANO
27	B11	Bell DX	Kb	E.PIANO
28	B12	Dark DX	Kb	E.PIANO
29	B13	GS Tines	Kb	E.PIANO
30	B14	WurliTrem	Kb	E.PIANO
31	B15	WurliAmped	Kb	E.PIANO
32	B16	SuperClavi	Kb	CLAVI
33	C01	StereoClav	Kb	CLAVI
34	C02	HollowClav	Kb	CLAVI
35	C03	Nu Phasing	Kb	CLAVI
36	C04	TouchClavi	Kb	CLAVI
37	C05	Tibetan	Cp	BELL
38	C06	Twinkle	Cp	BELL
39	C07	ChorusBell	Cp	BELL
40	C08	Stack Bell	Cp	BELL
41	C09	J-Pop	Cp	BELL
42	C10	WoodBell	Cp	BELL
43	C11	Tmp/Bl/Glk	Cp	BELL
44	C12	St. Paul	Or	PIPE
45	C13	Fluty Pipe	Or	PIPE
46	C14	St. Peter	Or	PIPE
47	C15	Tradi	Or	ELEC.
48	C16	Sunday	Or	PIPE
49	D01	Reedy Pipe	Or	PIPE
50	D02	Prelude	Or	PIPE
51	D03	Green Tea	Or	ELEC.
52	D04	Vintage C	Or	ELEC.
53	D05	16+8+5&1/3	Or	ELEC.
54	D06	Jazzy 1	Or	ELEC.
55	D07	Jazzy 2	Or	ELEC.
56	D08	Slow Jam	Or	ELEC.
57	D09	Swishie	Or	ELEC.
58	D10	Flutey	Or	ELEC.
59	D11	DrawContrl	Or	ELEC.
60	D12	Fully	Or	ELEC.
61	D13	Progressy	Or	ELEC.
62	D14	Crunchy	Or	ELEC.
63	D15	Rocky	Or	ELEC.
64	D16	Early Bird	Or	ELEC.

Номер		Название голоса	Категория	Субкатегория
65	E01	1967 Keys	Or	ELEC.
66	E02	Compact	Or	ELEC.
67	E03	Nylon+Harm	Gt	A.GTR
68	E04	SteelCmprs	Gt	A.GTR
69	E05	Ac&Harmnic	Gt	A.GTR
70	E06	Mega Steel	Gt	A.GTR
71	E07	12Strings	Gt	A.GTR
72	E08	CleanEl&Ac	Gt	A.GTR
73	E09	JazzGtMelo	Gt	E.GTR
74	E10	2CoilAmp	Gt	E.GTR
75	E11	CleanSlap	Gt	E.GTR
76	E12	SomeHair	Gt	E.GTR
77	E13	MiddyTrem	Gt	E.GTR
78	E14	CompDream	Gt	E.GTR
79	E15	Spanky	Gt	E.GTR
80	E16	1CoilChors	Gt	E.GTR
81	F01	VinTremolo	Gt	E.GTR
82	F02	Policia	Gt	E.GTR
83	F03	Rockabilly	Gt	E.GTR
84	F04	Rotator	Gt	E.GTR
85	F05	TouchWah	Gt	E.GTR
86	F06	Mega Clean	Gt	E.GTR
87	F07	OverDriven	Gt	E.GTR
88	F08	TexBoogie	Gt	E.GTR
89	F09	Feedbacker	Gt	E.GTR
90	F10	Voodooman	Gt	E.GTR
91	F11	LatinLover	Gt	E.GTR
92	F12	BlueLead	Gt	E.GTR
93	F13	Metal Mute	Gt	E.GTR
94	F14	OverTheTop	Gt	E.GTR
95	F15	Mega Dist	Gt	E.GTR
96	F16	Groovin'Bs	Ba	A.BASS
97	G01	Mega Acous	Ba	A.BASS
98	G02	FingerPBs	Ba	E.BASS
99	G03	PrecFW	Ba	E.BASS
100	G04	RoundWound	Ba	E.BASS
101	G05	FretBuzzy	Ba	E.BASS
102	G06	S-VeeTee	Ba	E.BASS
103	G07	MidRngFngr	Ba	E.BASS
104	G08	FingBsAmp	Ba	E.BASS
105	G09	PBasFngDst	Ba	E.BASS
106	G10	MegaFngHrm	Ba	E.BASS
107	G11	Velo Bass	Ba	E.BASS
108	G12	Mega Slap	Ba	E.BASS
109	G13	PickOpen	Ba	E.BASS
110	G14	PickMuteDr	Ba	E.BASS
111	G15	Mega Pick	Ba	E.BASS
112	G16	FretlsSolo	Ba	E.BASS
113	H01	Mega Frtls	Ba	E.BASS
114	H02	Violin 1	St	SOLO
115	H03	Viola 1	St	SOLO
116	H04	Cello 1	St	SOLO
117	H05	Solo	St	SOLO
118	H06	SoloSpicat	St	SOLO
119	H07	ContraBas1	St	SOLO
120	H08	CelloEnsem	St	ENSEM.
121	H09	ViolaEnsem	St	ENSEM.
122	H10	ViolnEnsem	St	ENSEM.
123	H11	SmallSect	St	ENSEM.
124	H12	MediumEns	St	ENSEM.
125	H13	SpicaLines	St	ENSEM.
126	H14	BackGround	St	ENSEM.
127	H15	Hophead	St	ENSEM.
128	H16	Ens Mix	St	ENSEM.

PRE 2 (MSB=63, LSB=1)

Номер		Название голоса	Категория	Субкатегория
1	A01	Hard Ens	St	ENSEM.
2	A02	BigStrings	St	ENSEM.
3	A03	MutedSect	St	ENSEM.
4	A04	BigSymphny	St	ENSEM.
5	A05	3 8ve Lush	St	ENSEM.
6	A06	BeautyHarp	Gt	PLUCK
7	A07	PizzSect	St	ENSEM.
8	A08	Oct Pizz	St	ENSEM.
9	A09	PWMStrings	St	SYNTH
10	A10	Noble Pad	St	SYNTH
11	A11	Stringy	St	SYNTH
12	A12	MournStrgs	St	SYNTH
13	A13	JP Strings	St	SYNTH
14	A14	Superstrgs	St	SYNTH
15	A15	VP Soft	St	SYNTH
16	A16	PhaseStrgs	St	SYNTH
17	B01	Oct String	St	SYNTH
18	B02	3 Octave	St	SYNTH
19	B03	StrMachine	St	SYNTH
20	B04	DynoTrumpt	Br	SOLO
21	B05	SoftJazzTp	Br	SOLO
22	B06	Phase Mute	Br	SOLO
23	B07	Fluegel	Br	SOLO
24	B08	Trombone1	Br	SOLO
25	B09	BoneSectn	Br	SECTION
26	B10	FrenchHorn	Br	SOLO
27	B11	FrHornSect	Br	SECTION
28	B12	Symphony	Br	SECTION
29	B13	SlowAttack	Br	SECTION
30	B14	Fanfare	Br	SECTION
31	B15	Big&Brite	Br	SECTION
32	B16	VeloFalls	Br	SECTION
33	C01	Sforzando	Br	SECTION
34	C02	Big Band	Br	SECTION
35	C03	SaxBigBand	Br	SECTION
36	C04	Hybrid	Br	SECTION
37	C05	CS-90	Br	SYNTH
38	C06	FM Brass	Br	SYNTH
39	C07	Thinth	Br	SYNTH
40	C08	ObStuff	Br	SYNTH
41	C09	OberBrass	Br	SYNTH
42	C10	OberHorns	Br	SYNTH
43	C11	T Brass	Br	SYNTH
44	C12	BigSquish	Br	SYNTH
45	C13	Soft 5th	Br	SYNTH
46	C14	After 1984	Br	SYNTH
47	C15	SoprnoSoft	Rp	SAX/RD
48	C16	Alto Vib	Rp	SAX/RD
49	D01	Velo Alto	Rp	SAX/RD
50	D02	Tenor Soft	Rp	SAX/RD
51	D03	Hip Bari	Rp	SAX/RD
52	D04	4 Brothers	Rp	SAX/RD
53	D05	Sweet Oboe	Rp	SAX/RD
54	D06	BassoonVib	Rp	SAX/RD
55	D07	Clarinet 1	Rp	SAX/RD
56	D08	WW Trio	Rp	SAX/RD
57	D09	DblRdQuart	Rp	SAX/RD
58	D10	SweetFlute	Rp	PIPE
59	D11	TapeFlute	Rp	PIPE
60	D12	BluzDistrt	Rp	OTHER
61	D13	TootsyHarp	Rp	OTHER
62	D14	Santur	Gt	PLUCK
63	D15	Kotoun	Gt	PLUCK
64	D16	Kanun	Gt	PLUCK

PRE 3 (MSB=63, LSB=2)

Номер		Название голоса	Категория	Субкатегория
65	E01	Bouzuki	Gt	PLUCK
66	E02	Oud	Gt	PLUCK
67	E03	WhereAml?	Gt	PLUCK
68	E04	Ney	Rp	PIPE
69	E05	Zurna	Rp	OTHER
70	E06	Digidoo	Rp	PIPE
71	E07	Tabla Zone	Dr	PERC.
72	E08	Kokyu	St	SOLO
73	E09	ChurchOohs	Pd	CHOIR
74	E10	Ooh-Aah	Pd	CHOIR
75	E11	SynChoir	Pd	CHOIR
76	E12	SpaceChoir	Pd	CHOIR
77	E13	AquaStop	Pd	CHOIR
78	E14	Paradies	Pd	BRIGHT
79	E15	Westerlies	Pd	BRIGHT
80	E16	Tibet Ens.	Pd	BRIGHT
81	F01	Atlantis	Me	MOTION
82	F02	Forest	Me	MOTION
83	F03	Analog	Pd	SOFT
84	F04	MellowAnlg	Pd	SOFT
85	F05	Square	Pd	SOFT
86	F06	BackPad MW	Pd	SOFT
87	F07	PWM Soft	Pd	SOFT
88	F08	Sine Pad	Pd	SOFT
89	F09	Ana Dreams	Pd	BRIGHT
90	F10	BrassMover	Pd	SOFT
91	F11	Dark Light	Pd	SOFT
92	F12	Twist Pad	Pd	BRIGHT
93	F13	Voxy Air	Pd	BRIGHT
94	F14	Ore	Pd	SOFT
95	F15	Fazer Pad	Pd	BRIGHT
96	F16	GreenGiant	Pd	BRIGHT
97	G01	Ohm-Like	Pd	SOFT
98	G02	Arc-light	Pd	BRIGHT
99	G03	Grass Arp	Pd	SOFT
100	G04	Vapor	Pd	SOFT
101	G05	Silverlake	Pd	SOFT
102	G06	FrozenPad	Pd	BRIGHT
103	G07	Sadness	Pd	BRIGHT
104	G08	Whisperer	Pd	BRIGHT
105	G09	Mini Three	Ld	HARD
106	G10	VintageSaw	Ld	HARD
107	G11	Punch Lead	Ld	HARD
108	G12	Bright Saw	Ld	HARD
109	G13	OrbitSine	Ld	SOFT
110	G14	DuckLead	Ld	SOFT
111	G15	FunkyPulse	Ld	HARD
112	G16	Trojan	Ld	HARD
113	H01	Feeling	Ld	SOFT
114	H02	Crying	Ld	HARD
115	H03	WoodPanel	Ld	HARD
116	H04	JustASync	Ld	HARD
117	H05	ThinkSync	Ld	HARD
118	H06	FlangeFilt	Ld	HARD
119	H07	Lucky	Ld	SOFT
120	H08	PulseWound	Ld	HARD
121	H09	Rap Lead	Ld	SOFT
122	H10	Soft RnB	Ld	SOFT
123	H11	Sine Lead	Ld	SOFT
124	H12	Singleline	Ld	SOFT
125	H13	Soft Lead	Ld	SOFT
126	H14	SpaceLead	Ld	HARD
127	H15	Mr. Finger	Ld	SOFT
128	H16	Mini Soft	Ld	SOFT

Номер		Название голоса	Категория	Субкатегория
1	A01	PulseWidth	Ld	HARD
2	A02	NuMini	Ld	SOFT
3	A03	Clicky Saw	Ld	SOFT
4	A04	SimpleBass	Ba	SYNTH
5	A05	Fat Sine	Ba	SYNTH
6	A06	Dark Bass	Ba	SYNTH
7	A07	OneVoice	Ba	SYNTH
8	A08	RnBass	Ba	SYNTH
9	A09	Fundamentl	Ba	SYNTH
10	A10	SingleOsc	Ba	SYNTH
11	A11	SimpleReso	Ba	SYNTH
12	A12	Unison	Ba	SYNTH
13	A13	Moonbass	Ba	SYNTH
14	A14	Long Spit	Ba	SYNTH
15	A15	Sweeper	Ba	SYNTH
16	A16	Bass&Comp!	Ba	SYNTH
17	B01	Short PWM	Ba	SYNTH
18	B02	Lately	Ba	SYNTH
19	B03	Boogie A	Ba	SYNTH
20	B04	Dry Syn	Ba	SYNTH
21	B05	NeedleBs	Ba	SYNTH
22	B06	Wazzo	Ba	SYNTH
23	B07	VeloMaster	Ba	SYNTH
24	B08	Network	Se	SYNTH
25	B09	Lazerzz	Se	SYNTH
26	B10	Spacecraft	Se	SYNTH
27	B11	The Gate	Se	SYNTH
28	B12	NevrRepeat	Se	SYNTH
29	B13	Prisoner	Me	MOTION
30	B14	Chromosome	Me	MOTION
31	B15	Lynch Mob	Me	MOTION
32	B16	Alioth	Me	MOTION
33	C01	China Bird	Me	MOTION
34	C02	Vespers	Me	MOTION
35	C03	Glacy	Me	MOTION
36	C04	Orch Hits	Me	HIT
37	C05	80's Hit	Me	HIT
38	C06	CosmicRain	Me	MOTION
39	C07	Mckinley	Me	MOTION
40	C08	Glass Tube	Me	MOTION
41	C09	ModrnWinds	Me	MOTION
42	C10	Wireman	Sc	HARD
43	C11	After All	Sc	SOFT
44	C12	BigComp	Sc	HARD
45	C13	NoizRezz	Sc	HARD
46	C14	Cool Tech	Sc	HARD
47	C15	Talker	Sc	HARD
48	C16	Icing	Sc	SOFT
49	D01	Wobbly	Sc	SOFT
50	D02	NightWatch	Sc	HARD
51	D03	StringBell	Sc	SOFT
52	D04	Antares	Sc	HARD
53	D05	Airy Nylon	Sc	SOFT
54	D06	Retro	Sc	HARD
55	D07	PopularSyn	Sc	HARD
56	D08	PWM Percu	Sc	HARD
57	D09	Ore-Tech	Sc	HARD
58	D10	PlukdThing	Sc	HARD
59	D11	PluckBells	Sc	HARD
60	D12	Sine Comp	Sc	SOFT
61	D13	Aggressor	Co	SEQ
62	D14	British	Co	SEQ
63	D15	Wavepanner	Co	SEQ
64	D16	Pounder	Co	SEQ

Номер		Название голоса	Категория	Субкатегория
65	E01	FreshCut	Co	SEQ
66	E02	Zhuffle	Co	SEQ
67	E03	Vanilla	Co	SEQ
68	E04	XDance	Br	SYNTH
69	E05	TrncHook	Ld	HARD
70	E06	Portatone	Ld	HARD
71	E07	Flangewall	Pd	BRIGHT
72	E08	HPF+LPFpad	Pd	BRIGHT
73	E09	Trance MW	Pd	BRIGHT
74	E10	Long HiPa	Me	MOTION
75	E11	Pad&Syn	Pd	BRIGHT
76	E12	Phat Dino	Ld	HARD
77	E13	Big Lead	Ld	HARD
78	E14	FaaatDance	Sc	HARD
79	E15	Fast PWM	Ba	SYNTH
80	E16	BassPedal	Ba	SYNTH
81	F01	Hypervelo	Ba	SYNTH
82	F02	NoiseBass	Ba	SYNTH
83	F03	Alias Bass	Ba	SYNTH
84	F04	Pulse Step	Ba	SYNTH
85	F05	Acidd	Ba	SYNTH
86	F06	Sprocket	Se	SYNTH
87	F07	Ringvoxx	Se	SYNTH
88	F08	Crazy Bird	Se	SYNTH
89	F09	ProtoType	Me	MOTION
90	F10	Asp	Se	SYNTH
91	F11	XtremeRezz	Me	MOTION
92	F12	Ambi Bite	Me	HIT
93	F13	RevReality	Se	SYNTH
94	F14	LoFi-Maj7	Pd	SOFT
95	F15	Clusters	Me	MOTION
96	F16	Interlude	Me	MOTION
97	G01	C Theme	Me	MOTION
98	G02	Horizon	Me	MOTION
99	G03	Bit Space	Me	MOTION
100	G04	Thexism	Se	SYNTH
101	G05	EkoWhistle	Me	MOTION
102	G06	Moai	Sc	HARD
103	G07	HPF Dance	Ld	HARD
104	G08	Hit&Down	Me	HIT
105	G09	Griffin	Sc	HARD
106	G10	Olde Skool	Sc	HARD
107	G11	TranceStab	Sc	HARD
108	G12	UFOric	Co	SEQ
109	G13	Strong Jam	Co	SEQ
110	G14	Poly HPF	Co	SEQ
111	G15	SweetNoize	Co	SEQ
112	G16	Bollinger	Or	OTHER
113	H01	Step Dance	Co	SEQ
114	H02	EuroKidz	Co	SEQ
115	H03	Oxide	Ba	SYNTH
116	H04	DistortoBa	Ba	SYNTH
117	H05	Dee Tune	Ba	SYNTH
118	H06	SimplyRndm	Co	SEQ
119	H07	Soft Ice	Co	SEQ
120	H08	The Ripper	Se	SYNTH
121	H09	X-fade Pad	Pd	SOFT
122	H10	Lost Ring	Me	MOTION
123	H11	PlasmaWarp	Me	MOTION
124	H12	Queens	Sc	HARD
125	H13	Mizar	Sc	HARD
126	H14	My Reality	Me	MOTION
127	H15	Gladiator	Me	MOTION
128	H16	Chordz	Ld	HARD

PRE 4 (MSB=63, LSB=3)

Номер		Название голоса	Категория	Субкатегория
1	A01	OnTheVerge	Co	SEQ
2	A02	EleXon MW	Co	SEQ
3	A03	Stuttrtron	Co	SEQ
4	A04	Alaska	Co	SEQ
5	A05	Bros&Sist	Co	SEQ
6	A06	ChillDown	Co	SEQ
7	A07	Champ Arp	Co	SEQ
8	A08	NeedlzVlSw	Co	SEQ
9	A09	Das Sneak	Co	SEQ
10	A10	Ibizagruv	Co	SEQ
11	A11	Droid	Co	SEQ
12	A12	SQ02 Wheel	Co	SEQ
13	A13	Tamburiza	Co	SEQ
14	A14	AiryChill	Co	SEQ
15	A15	Inverted	Co	SEQ
16	A16	Pizza No.1	Co	SEQ
17	B01	WorkerAnt	Co	SEQ
18	B02	XtremeHarp	Co	SEQ
19	B03	i-Vox	Co	SEQ
20	B04	Zippet	Co	SEQ
21	B05	Electronix	Co	SEQ
22	B06	Sensual	Co	SEQ
23	B07	Valvolex	Co	SEQ
24	B08	SimpleArp	Co	SEQ
25	B09	TekkNow MW	Co	SEQ
26	B10	Traxxx	Co	SEQ
27	B11	Voodoo Key	Co	SEQ
28	B12	Oztralian	Co	SEQ
29	B13	Polarized	Co	SEQ
30	B14	Trans-D	Sc	HARD
31	B15	TranceTaO	Sc	HARD
32	B16	W Phaser	Sc	HARD
33	C01	CoolTrance	Sc	HARD
34	C02	Echo Comp	Sc	HARD
35	C03	Tuxedo	Sc	HARD
36	C04	Equatorial	Sc	SOFT
37	C05	P5AnaPunch	Sc	HARD
38	C06	SilkRoad	Sc	SOFT
39	C07	DPCM Atack	Sc	HARD
40	C08	Power Hook	Ld	HARD
41	C09	Dirty Hook	Ld	HARD
42	C10	Push Ahead	Ld	HARD
43	C11	Tekk Glide	Ld	HARD
44	C12	Growl Tekk	Ld	HARD
45	C13	Cool Body	Ld	HARD
46	C14	minor3rd	Ld	SOFT
47	C15	Sonix	Ld	SOFT
48	C16	LdDuck	Ld	HARD
49	D01	Screameemy	Ld	HARD
50	D02	Schoolday	Ld	SOFT
51	D03	DynmcMini	Ld	HARD
52	D04	PinzLead	Ld	HARD
53	D05	Sutra	Ld	HARD
54	D06	BlownTube	Ld	SOFT
55	D07	101 Bass	Ba	SYNTH
56	D08	Growler	Ba	SYNTH
57	D09	MonsterBas	Ba	SYNTH
58	D10	Biting	Ba	SYNTH
59	D11	Pulse Stop	Ba	SYNTH
60	D12	TackyPulse	Ba	SYNTH
61	D13	BigBass	Ba	SYNTH
62	D14	Acid Bass	Ba	SYNTH
63	D15	Crush Bass	Ba	SYNTH
64	D16	Komprssr	Ba	SYNTH

Номер		Название голоса	Категория	Субкатегория
65	E01	Competitor	Ba	SYNTH
66	E02	Ice Rink	Pd	BRIGHT
67	E03	Zircon	Pd	BRIGHT
68	E04	Xdreams	Pd	BRIGHT
69	E05	Cold Day	Pd	BRIGHT
70	E06	Livin Pad	Pd	BRIGHT
71	E07	SharpTeeth	Pd	BRIGHT
72	E08	MothrEarth	Pd	SOFT
73	E09	Royal	Pd	SOFT
74	E10	SoftBrassy	Pd	SOFT
75	E11	Turbulence	Pd	BRIGHT
76	E12	Tranquil	Pd	BRIGHT
77	E13	DreamShift	Pd	SOFT
78	E14	YelloRiver	Pd	SOFT
79	E15	The Breath	Pd	CHOIR
80	E16	High Wire	Pd	SOFT
81	F01	Humanity	Pd	SOFT
82	F02	Climber	Pd	SOFT
83	F03	Deception	Pd	SOFT
84	F04	Chorus Pad	Pd	SOFT
85	F05	OnTheWater	Ap	A PIANO
86	F06	Pianyl	Kb	E.PIANO
87	F07	DigiOrg	Or	ELEC.
88	F08	RandomBell	Cp	BELL
89	F09	Anime Box	Cp	BELL
90	F10	Clackbel	Cp	BELL
91	F11	Hard Bell	Cp	BELL
92	F12	TronStr	St	SYNTH
93	F13	TronVln	St	SOLO
94	F14	TronFlt	Rp	PIPE
95	F15	Irish	Rp	PIPE
96	F16	Felicity	Me	MOTION
97	G01	Vibrancy	Me	MOTION
98	G02	Metalflake	Me	MOTION
99	G03	RadioVenus	Me	MOTION
100	G04	Molecule	Me	MOTION
101	G05	Clock	Me	MOTION
102	G06	Elec Blue	Me	MOTION
103	G07	Undersea	Me	MOTION
104	G08	Echo	Me	MOTION
105	G09	Slipstream	Me	MOTION
106	G10	Chyo Ethno	Me	MOTION
107	G11	MetalShapr	Me	MOTION
108	G12	Mystix	Me	MOTION
109	G13	Memories	Me	MOTION
110	G14	Mstrvrt	Me	MOTION
111	G15	Calculator	Me	MOTION
112	G16	Hitori	Me	MOTION
113	H01	Stutter	Me	MOTION
114	H02	Excavator	Me	MOTION
115	H03	Warptek	Me	MOTION
116	H04	CosmicDust	Me	MOTION
117	H05	VinylHit	Me	HIT
118	H06	UndrGround	Se	SYNTH
119	H07	NoControl	Se	SYNTH
120	H08	Propagate	Se	SYNTH
121	H09	UndrForest	Se	SYNTH
122	H10	PilotPlant	Se	SYNTH
123	H11	Expansion	Se	SYNTH
124	H12	Eggoo	Se	SYNTH
125	H13	Modulator	Se	SYNTH
126	H14	Water Hit	Se	SYNTH
127	H15	Toukai	Se	SYNTH
128	H16	Khol	Dr	PERC.

USER 1 (MSB=63, LSB=8)

Номер		Название голоса	Категория	Субкатегория
1	A01	The Hunter	Co	SEQ
2	A02	Bass'n Pad	Co	SEQ
3	A03	Surprise	Co	SEQ
4	A04	Quo Vadis	Co	SEQ
5	A05	Metal Arp	Co	SEQ
6	A06	TransmittR	Co	SEQ
7	A07	Pistachio	Co	SEQ
8	A08	X-Wave	Co	SEQ
9	A09	Cherry	Co	SEQ
10	A10	Elec Drum	Co	SEQ
11	A11	SimpleSize	Co	SEQ
12	A12	Straighter	Co	SEQ
13	A13	BollogPuls	Co	SEQ
14	A14	Strawberry	Co	SEQ
15	A15	Ghana Rain	Co	SEQ
16	A16	Elc.Music	Co	SEQ
17	B01	FX Jam	Se	SYNTH
18	B02	Rap Top	Co	SEQ
19	B03	MouthShots	Se	SYNTH
20	B04	Embassy	Co	SEQ
21	B05	Basic Arp	Co	SEQ
22	B06	Mr. Groovy	Co	SEQ
23	B07	SyncArp 1	Co	SEQ
24	B08	80's Ens	Co	SEQ
25	B09	SyncArp 2	Co	SEQ
26	B10	Magician	Co	SEQ
27	B11	ANbasicARP	Co	SEQ
28	B12	Particle	Co	SEQ
29	B13	FuzzMorf	Co	SEQ
30	B14	LighTek	Co	SEQ
31	B15	Creme Cafe	Co	SEQ
32	B16	Jitter	Co	SEQ
33	C01	Unplugged	Gt	A.GTR
34	C02	FolkGuitar	Gt	A.GTR
35	C03	Strum12Str	Gt	A.GTR
36	C04	Thin Pick	Gt	A.GTR
37	C05	ThickStrum	Gt	A.GTR
38	C06	LazyChorus	Gt	A.GTR
39	C07	Latin Jam	Gt	A.GTR
40	C08	Slippery	Gt	A.GTR
41	C09	Nylon Arp	Gt	A.GTR
42	C10	WackaWacka	Gt	E.GTR
43	C11	Touch Funk	Gt	A.GTR
44	C12	Funk Star	Gt	E.GTR
45	C13	Clean Funk	Gt	E.GTR
46	C14	Riff Rock	Gt	E.GTR
47	C15	Dist. Lick	Gt	E.GTR
48	C16	VintageAmp	Gt	E.GTR
49	D01	RockBackin	Gt	E.GTR
50	D02	Wah Lead	Gt	E.GTR
51	D03	OverTopArp	Gt	E.GTR
52	D04	1stJazzBas	Ba	A.BASS
53	D05	GroovinArp	Ba	A.BASS
54	D06	FunkFinger	Ba	E.BASS
55	D07	Basman12/8	Ba	E.BASS
56	D08	Slapper	Ba	E.BASS
57	D09	No Frettin	Ba	E.BASS
58	D10	PickedBass	Ba	E.BASS
59	D11	Buzzy Pick	Ba	E.BASS
60	D12	MellowBass	Ba	E.BASS
61	D13	FingerComp	Ba	E.BASS
62	D14	Salsalicio	Ap	A PIANO
63	D15	Montuno	Ap	A PIANO
64	D16	Mutey Arp	Ap	A PIANO

USER 2 (MSB=63, LSB=9)

Номер		Название голоса	Категория	Субкатегория
65	E01	1FingerRck	Ap	A PIANO
66	E02	ClubBackin	Ap	A PIANO
67	E03	VintageArp	Kb	E.PIANO
68	E04	Arp Clavi	Kb	CLAVI
69	E05	House Org	Or	ELEC.
70	E06	Bali Bells	Cp	BELL
71	E07	Bell Shop	Cp	BELL
72	E08	StringPart	St	ENSEM.
73	E09	The Sneak	St	ENSEM.
74	E10	Pizz Arp	St	ENSEM.
75	E11	Harp Arp	St	SOLO
76	E12	HeavenSent	Co	SEQ
77	E13	Quiet Orch	Br	SECTION
78	E14	Funk Bros	Br	SECTION
79	E15	Fall Arp	Br	SECTION
80	E16	Velo Flute	Rp	PIPE
81	F01	BaglamaArp	Gt	PLUCK
82	F02	Karbala 1	Gt	PLUCK
83	F03	Karbala 2	Gt	PLUCK
84	F04	Ney Arp	Rp	PIPE
85	F05	Sunny	Co	SEQ
86	F06	Afro	Co	SEQ
87	F07	Ethnology	Co	SEQ
88	F08	Funk Delhi	Gt	PLUCK
89	F09	R&B Solo	Ld	HARD
90	F10	Punchy Saw	Co	SEQ
91	F11	StarDrop	Co	SEQ
92	F12	Madhouse	Co	SEQ
93	F13	CompingPd	Co	SEQ
94	F14	Multi Mod	Co	SEQ
95	F15	Chinese	Co	SEQ
96	F16	Neptune	Co	SEQ
97	G01	Soundwork	Co	SEQ
98	G02	For Bertje	Co	SEQ
99	G03	SeqPad	Co	SEQ
100	G04	Waterproof	Me	MOTION
101	G05	RingBell	Co	SEQ
102	G06	SpectrmArp	Me	MOTION
103	G07	Himalya	Co	SEQ
104	G08	Creamy	Co	SEQ
105	G09	DreaminOfU	Co	SEQ
106	G10	Zynitas	Co	SEQ
107	G11	Magnetics	Me	MOTION
108	G12	ChillOut	Co	SEQ
109	G13	Sand ES	Me	MOTION
110	G14	V.S.E.Seq	Co	SEQ
111	G15	Orongo	Co	SEQ
112	G16	Dawn	Co	SEQ
113	H01	Tangerine	Co	SEQ
114	H02	Chocolate	Co	SEQ
115	H03	Safari	Co	SEQ
116	H04	Sushima	Co	SEQ
117	H05	Metaloop	Co	SEQ
118	H06	Kick Off	Co	SEQ
119	H07	Technokrat	Co	SEQ
120	H08	Hi 2 Lo MW	Co	SEQ
121	H09	Engineer	Co	SEQ
122	H10	Neon Soda	Co	SEQ
123	H11	Mocha	Co	SEQ
124	H12	LuxAeterna	Me	MOTION
125	H13	In My Head	Se	SYNTH
126	H14	Racer	Se	SYNTH
127	H15	Tribal	Dr	PERC.
128	H16	OrcDrummer	Dr	DRUMS

Номер		Название голоса	Категория	Субкатегория
1	A01	Prisoner	Me	MOTION
2	A02	Stuttrtron	Co	SEQ
3	A03	Echo Comp	Sc	HARD
4	A04	Full Grand	Ap	A PIANO
5	A05	Feedbacker	Gt	E.GTR
6	A06	Phat Dino	Ld	HARD
7	A07	Santur	Gt	PLUCK
8	A08	SweetFlute	Rp	PIPE
9	A09	Cold Day	Pd	BRIGHT
10	A10	Vintage'74	Kb	E.PIANO
11	A11	101 Bass	Ba	SYNTH
12	A12	Dirty Hook	Ld	HARD
13	A13	VinylHit	Me	HIT
14	A14	StrMachine	St	SYNTH
15	A15	Tibet Ens.	Pd	BRIGHT
16	A16	NoControl	Se	SYNTH
17	B01	Vibrancy	Me	MOTION
18	B02	Electronix	Co	SEQ
19	B03	CoolTrance	Sc	HARD
20	B04	Vintage C	Or	ELEC.
21	B05	Mega Pick	Ba	E.BASS
22	B06	Sonix	Ld	SOFT
23	B07	Kanun	Gt	PLUCK
24	B08	Hard Ens	St	ENSEM.
25	B09	Turbulence	Pd	BRIGHT
26	B10	Sweetness	Kb	E.PIANO
27	B11	Dark Bass	Ba	SYNTH
28	B12	W Phaser	Sc	HARD
29	B13	Ambi Bite	Me	HIT
30	B14	TronStr	St	SYNTH
31	B15	Ibizagruv	Co	SEQ
32	B16	PilotPlant	Se	SYNTH
33	C01	Molecule	Me	MOTION
34	C02	NeedlzVISw	Co	SEQ
35	C03	Tuxedo	Sc	HARD
36	C04	Tacky	Ap	A PIANO
37	C05	Wah Lead	Gt	E.GTR
38	C06	Cool Body	Ld	HARD
39	C07	Karbala 1	Gt	PLUCK
40	C08	Symphony	Br	SECTION
41	C09	MothrEarth	Pd	SOFT
42	C10	R&B Soft	Kb	E.PIANO
43	C11	Oxide	Ba	SYNTH
44	C12	TranceTaO	Sc	HARD
45	C13	LdDuck	Ld	HARD
46	C14	TronFlt	Rp	PIPE
47	C15	J-Pop	Cp	BELL
48	C16	Toukai	Se	SYNTH
49	D01	Echo	Me	MOTION
50	D02	Bros&Sist	Co	SEQ
51	D03	Antares	Sc	HARD
52	D04	Jazzy 2	Or	ELEC.
53	D05	Mega Slap	Ba	E.BASS
54	D06	PinzLead	Ld	HARD
55	D07	Chyo Ethno	Me	MOTION
56	D08	BackGround	St	ENSEM.
57	D09	YelloRiver	Pd	SOFT
58	D10	WurliAmped	Kb	E.PIANO
59	D11	Biting	Ba	SYNTH
60	D12	FreshCut	Co	SEQ
61	D13	Rap Lead	Ld	SOFT
62	D14	Compact	Or	ELEC.
63	D15	Stack Bell	Cp	BELL
64	D16	Modulator	Se	SYNTH

Номер		Название голоса	Категория	Субкатегория
65	E01	Excavator	Me	MOTION
66	E02	Tamburiza	Co	SEQ
67	E03	SilkRoad	Sc	SOFT
68	E04	Mono Comp	Ap	A PIANO
69	E05	Mega Steel	Gt	A.GTR
70	E06	VintageSaw	Ld	HARD
71	E07	Funk Delhi	Gt	PLUCK
72	E08	VeloFalls	Br	SECTION
73	E09	Whisperer	Pd	BRIGHT
74	E10	TouchClavi	Kb	CLAVI
75	E11	Boogie A	Ba	SYNTH
76	E12	Trance MW	Pd	BRIGHT
77	E13	Soft RnB	Ld	SOFT
78	E14	1967 Keys	Or	ELEC.
79	E15	RandomBell	Cp	BELL
80	E16	UndrForest	Se	SYNTH
81	F01	Calculator	Me	MOTION
82	F02	Alaska	Co	SEQ
83	F03	DPCM Atack	Sc	HARD
84	F04	Crunchy	Or	ELEC.
85	F05	MidRngFngr	Ba	E.BASS
86	F06	ThinkSync	Ld	HARD
87	F07	Afro	Co	SEQ
88	F08	Violin 1	St	SOLO
89	F09	SharpTeeth	Pd	BRIGHT
90	F10	SuperClavi	Kb	CLAVI
91	F11	Moonbass	Ba	SYNTH
92	F12	EuroKidz	Co	SEQ
93	F13	Olde Skool	Sc	HARD
94	F14	DuckLead	Ld	SOFT
95	F15	StringBell	Sc	SOFT
96	F16	NevrRepeat	Se	SYNTH
97	G01	Interlude	Me	MOTION
98	G02	Das Sneak	Co	SEQ
99	G03	Talker	Sc	HARD
100	G04	PianoBack	Ap	OTHER
101	G05	2CoilAmp	Gt	E.GTR
102	G06	WoodPanel	Ld	HARD
103	G07	Ney	Rp	PIPE
104	G08	Hybrid	Br	SECTION
105	G09	Westerlies	Pd	BRIGHT
106	G10	HardCP80	Ap	E GRAND
107	G11	Pulse Step	Ba	SYNTH
108	G12	Chordz	Ld	HARD
109	G13	Hit&Down	Me	HIT
110	G14	Fast PWM	Ba	SYNTH
111	G15	Tmp/Bl/Glk	Cp	BELL
112	G16	Sprocket	Se	SYNTH
113	H01	CosmicDust	Me	MOTION
114	H02	Zippet	Co	SEQ
115	H03	Moai	Sc	HARD
116	H04	Fully	Or	ELEC.
117	H05	PBasFngDst	Ba	E.BASS
118	H06	Tekk Glide	Ld	HARD
119	H07	Digidoo	Rp	PIPE
120	H08	BeautyHarp	Gt	PLUCK
121	H09	Flangewall	Pd	BRIGHT
122	H10	TX802	Kb	E.PIANO
123	H11	Wazzo	Ba	SYNTH
124	H12	SQ02 Wheel	Co	SEQ
125	H13	Oct Pizz	St	ENSEM.
126	H14	Lucky	Ld	SOFT
127	H15	RadioVenus	Me	MOTION
128	H16	Expansion	Se	SYNTH

GM (MSB=0, LSB=0)

Номер		Название голоса	Категория	Субкатегория
1	A01	ConcertGnd	Ap	A PIANO
2	A02	Rock Brite	Ap	A PIANO
3	A03	CP 2001	Ap	E GRAND
4	A04	Honkytonk	Ap	A PIANO
5	A05	E.Piano 1	Kb	E.PIANO
6	A06	E.Piano 2	Kb	E.PIANO
7	A07	Harpsicord	Kb	OTHER
8	A08	Brite Clav	Kb	CLAVI
9	A09	Celeste	Cp	MALLET
10	A10	Glocken	Cp	MALLET
11	A11	Music Box	Cp	PERC.
12	A12	Vibes	Cp	MALLET
13	A13	Marimba	Cp	MALLET
14	A14	Xylophone	Cp	MALLET
15	A15	TubulrBel	Cp	BELL
16	A16	Dulcimar	Cp	PERC.
17	B01	Draw Organ	Or	ELEC.
18	B02	Perc Organ	Or	ELEC.
19	B03	Rock Organ	Or	ELEC.
20	B04	ChurchOrgn	Or	PIPE
21	B05	Reed Organ	Or	OTHER
22	B06	Accordion	Kb	OTHER
23	B07	Harmonica	Rp	OTHER
24	B08	TangoAccrd	Kb	OTHER
25	B09	Velo Nylon	Gt	A.GTR
26	B10	Steel	Gt	A.GTR
27	B11	ModernJazz	Gt	E.GTR
28	B12	Clean Gt	Gt	E.GTR
29	B13	Mute	Gt	E.GTR
30	B14	Overdrive	Gt	E.GTR
31	B15	Distortion	Gt	E.GTR
32	B16	Harmonics	Gt	E.GTR
33	C01	Acoustic	Ba	A.BASS
34	C02	FingerBass	Ba	E.BASS
35	C03	PickBass	Ba	E.BASS
36	C04	Fretless	Ba	E.BASS
37	C05	SimpleSlap	Ba	E.BASS
38	C06	FingSlp SW	Ba	E.BASS
39	C07	SynthBass1	Ba	SYNTH
40	C08	SynthBass2	Ba	SYNTH
41	C09	Violin 2	St	SOLO
42	C10	Viola 2	St	SOLO
43	C11	Cello 2	St	SOLO
44	C12	ContraBas2	St	SOLO
45	C13	TremoloStr	St	ENSEM.
46	C14	Pizz	St	ENSEM.
47	C15	Harp	Gt	PLUCK
48	C16	Tmpni+Cym	Cp	PERC.
49	D01	StereoSt1	St	ENSEM.
50	D02	StereoSt2	St	ENSEM.
51	D03	Grand Saw	St	SYNTH
52	D04	SynString	St	SYNTH
53	D05	Aah Choir	Pd	CHOIR
54	D06	Ooh Choir	Pd	CHOIR
55	D07	Syn Voice	Pd	CHOIR
56	D08	Orch.Hit	Me	HIT
57	D09	Trumpet	Br	SOLO
58	D10	Trombone2	Br	SOLO
59	D11	Tuba	Br	SOLO
60	D12	MuteTrpt	Br	SOLO
61	D13	F.Horns	Br	SECTION
62	D14	Brass Sect	Br	SECTION
63	D15	SynthBrass	Br	SYNTH
64	D16	SoftBrs GM	Br	SYNTH

Номер		Название голоса	Категория	Субкатегория
65	E01	Soprano	Rp	SAX/RD
66	E02	Alto Sax	Rp	SAX/RD
67	E03	TenorSax	Rp	SAX/RD
68	E04	Bari Sax	Rp	SAX/RD
69	E05	Oboe	Rp	SAX/RD
70	E06	Eng.Horn	Rp	SAX/RD
71	E07	Bassoon	Rp	SAX/RD
72	E08	Clarinet 2	Rp	SAX/RD
73	E09	Piccolo	Rp	PIPE
74	E10	Flute	Rp	PIPE
75	E11	Recorder	Rp	PIPE
76	E12	Panflute	Rp	PIPE
77	E13	Bottle	Rp	PIPE
78	E14	Shakuhachi	Rp	PIPE
79	E15	Whistle	Rp	PIPE
80	E16	Ocarina	Rp	PIPE
81	F01	Square Ld	Ld	HARD
82	F02	Saw Ld	Ld	HARD
83	F03	Caliop Ld	Ld	SOFT
84	F04	Chiff Ld	Ld	HARD
85	F05	Charan Ld	Ld	HARD
86	F06	Voice Ld	Ld	SOFT
87	F07	Fifth Ld	Ld	HARD
88	F08	Bass&Ld	Ld	HARD
89	F09	New Age	Pd	BRIGHT
90	F10	Warm Pad	Pd	SOFT
91	F11	Poly Synth	Pd	BRIGHT
92	F12	Choir Pad	Pd	CHOIR
93	F13	BowedPad	Pd	SOFT
94	F14	Metal Pad	Pd	BRIGHT
95	F15	Halo Pad	Pd	BRIGHT
96	F16	Sweep Pad	Pd	BRIGHT
97	G01	Rain Pad	Me	MOTION
98	G02	SoundTrack	Pd	BRIGHT
99	G03	Crystal	Cp	BELL
100	G04	Atmosphere	Pd	SOFT
101	G05	Brightness	Sc	HARD
102	G06	Goblin	Me	MOTION
103	G07	Echoes	Me	MOTION
104	G08	Sci-Fi	Pd	BRIGHT
105	G09	Sitar	Gt	PLUCK
106	G10	Banjo	Gt	PLUCK
107	G11	Shamisen	Gt	PLUCK
108	G12	Koto	Gt	PLUCK
109	G13	Kalimba	Cp	PERC.
110	G14	Bagpipe	Rp	SAX/RD
111	G15	Fiddle	St	SOLO
112	G16	Shehnai	Rp	SAX/RD
113	H01	Tinkerbel	Cp	BELL
114	H02	Agogo	Dr	PERC.
115	H03	Steeldrum	Cp	MALLET
116	H04	Woodblock	Dr	PERC.
117	H05	Taikodrum	Dr	PERC.
118	H06	MelodicTom	Dr	DRUMS
119	H07	Synth Drum	Dr	DRUMS
120	H08	Rev Cymbal	Se	SYNTH
121	H09	Fret Noise	Se	NATUR.
122	H10	BreathNoiz	Se	NATUR.
123	H11	Seashore	Se	NATUR.
124	H12	Tweet	Se	NATUR.
125	H13	Telephone	Se	NATUR.
126	H14	Helicopter	Se	NATUR.
127	H15	Applause	Se	NATUR.
128	H16	Gunshot	Se	NATUR.

Перечень названий голосов ударных инструментов

Предварительные настройки (MSB=63, LSB=32)

№ предварительной настройки	Название голоса	
1	Hyper Std	Эти наборы ударных инструментов были специально запрограммированы для различных музыкальных стилей при близком соответствии стандартному порядку инструментов набора GM.
2	DryStandrd	
3	NewRock	
4	RockSt1	
5	RockSt2	
6	RockMono1	
7	RockMono2	
8	Hip Hop1	
9	Hip Hop2	
10	Hip Hop3	
11	Hip Hop4	
12	Hip Hop5	
13	Hip Hop6	
14	HipStick1	
15	HipStick2	
16	HipStick3	
17	HipStick4	
18	T9HipKit1	
19	T9HipKit2	
20	R&B Kit1	
21	R&B Kit2	
22	R&B Kit3	
23	AnalogT9	
24	AnalogT8	
25	Tekno Kit	
26	House Kit1	
27	House Kit2	
28	Big Kit	
29	Break Kit	
30	Drum'nBass	
31	Acid Kit	
32	Jungle Kit	
33	Electric	
34	Human Kit	
35	Hard Kit	
36	Distorted	
37	Ambient	
38	Jazz Kit	
39	Orchestral	
40	Garage	Эти оригинальные наборы ударных инструментов для MO6 и MO8, отличаются особым нестандартным порядком для упрощения исполнения.
41	All Round	
42	Rock Multi	
43	Hip Multi	
44	Percussion	Эти оригинальные наборы ударных инструментов отличаются разнообразием инструментов и особых звуковых эффектов и сгруппированы в соответствии с их типами.
45	Latin Perc	
46	Gtr/Bs Fx	
47	Wacko Kit	
48	Wood Bits	
49	Metal Bits	
50	Hands Kit	
51	Scratches	
52	AcstSnares	
53	StSnares	
54	AllKicks	
55	DanceKick	
56	EasySnares	
57	Cuban	
58	SynPopKit	
59	Arabic Mix	
60	BellyDance	
61	DanceSnare	
62	SpecialSFX	
63	Synthetic	
64	SFX Kit	

GM (MSB=127, LSB=0)

GM Drum No.	Название голоса	
1	Stereo GM	

Перечень назначений наборов ударных инструментов

PRE 1 Hyper Std

Нота	№ сигнала	Наименование сигнала
C 0	933	Pc Clave
C#0	1391	Dr SdBrMtSt
D 0	1397	Dr SdBrSwrSt
D#0	1394	Dr SdBrMt2St
E 0	1400	Dr SdBSwrAtSt
F 0	1387	Dr SdLvRolSt
F#0	932	Pc Castanet
G 0	1200	Dr SdNm1St
G#0	930	Pc Stick
A 0	1029	Dr BdFkSonSt
A#0	1232	Dr SdBsSt1-3
B 0	973	Dr BdSnap1
C 1	1023	Dr BdHSonSt
C#1	1376	Dr SdClRmSt
D 1	1247	Dr SdSonSt1-4
D#1	953	Pc ClapT9
E 1	1297	Dr SdTgtSt1-4
F 1	1636	Dr TomFlr St
F#1	1546	Dr HHClFtSt
G 1	1636	Dr TomFlr St
G#1	1550	Dr HHHlf2St
A 1	1632	Dr TomLow St
A#1	1554	Dr HHOp2St
B 1	1632	Dr TomLow St
C 2	1628	Dr TomMid St
C#2	1673	Dr CrashRL
D 2	1624	Dr TomHi St
D#2	1682	Dr RideCym St
E 2	1701	Dr ChinaSt
F 2	1690	Dr RideCup St
F#2	912	Pc TambrnSw
G 2	1706	Dr SplashSt
G#2	946	Pc Cowbell2
A 2	1673	Dr CrashRL
A#2	935	Pc Vibraslap
B 2	1685	Dr RideCym RL
C 3	873	Pc Bongo H1
C#3	872	Pc Bongo L
D 3	859	Pc CongaTip
D#3	857	Pc Conga Opn
E 3	866	Pc TumbaOpen
F 3	875	Pc TmbaleH1-3
F#3	879	Pc TmbaleL1-3
G 3	922	Pc AgogoHi
G#3	923	Pc AgogoLo
A 3	893	Pc Cabasa1-2
A#3	891	Pc MaracasSlr
B 3	936	Pc Whistle
C 4	936	Pc Whistle
C#4	926	Pc GuiroShort
D 4	925	Pc GuiroLong
D#4	933	Pc Clave
E 4	934	Pc WoodBlock
F 4	934	Pc WoodBlock
F#4	871	Pc CuicaHi
G 4	870	Pc CuicaLo
G#4	939	Pc TriangleMt
A 4	938	Pc TriangleOp
A#4	899	Pc Shaker 1
B 4	951	Pc SleighBel
C 5	952	Pc BellTree
C#5	1114	Dr SdBldSt1-4
D 5	1267	Dr SdBlSt1-3
D#5	1290	Dr SdBhR1-3
E 5	1317	Dr SdHipSt1-2
F 5	1194	Dr SdNmSt1-4
F#5	1355	Dr SdLdwHMono
G 5	1135	Dr SdSolSt1-3
G#5	1358	Dr SdHeavy
A 5	1218	Dr SdFk1St
A#5	1000	Dr BdNm1St
B 5	1029	Dr BdFkSonSt
C 6	972	Dr BdSnap1-2

PRE 2 DryStandrd

Нота	№ сигнала	Наименование сигнала
C 0	933	Pc Clave
C#0	1391	Dr SdBrMtSt
D 0	1397	Dr SdBrSwrSt
D#0	1394	Dr SdBrMt2St
E 0	1400	Dr SdBSwrAtSt
F 0	1387	Dr SdLvRolSt
F#0	932	Pc Castanet
G 0	1200	Dr SdNm1St
G#0	930	Pc Stick
A 0	1008	Dr BdFkSt1-2
A#0	1234	Dr SdBsSt2-3
B 0	1017	Dr BdHiSt
C 1	999	Dr BdNmSt1-2
C#1	1376	Dr SdClRmSt
D 1	1194	Dr SdNmSt1-4
D#1	953	Pc ClapT9
E 1	1233	Dr SdBsSt1-2
F 1	1636	Dr TomFlr St
F#1	1498	Dr HHCls1-4St
G 1	1636	Dr TomFlr St
G#1	1521	Dr HHPdl3 St
A 1	1632	Dr TomLow St
A#1	1534	Dr HHOpn1-2St
B 1	1632	Dr TomLow St
C 2	1628	Dr TomMid St
C#2	1673	Dr CrashRL
D 2	1624	Dr TomHi St
D#2	1682	Dr RideCym St
E 2	1701	Dr ChinaSt
F 2	1690	Dr RideCup St
F#2	912	Pc TambrnSw
G 2	1706	Dr SplashSt
G#2	946	Pc Cowbell2
A 2	1673	Dr CrashRL
A#2	935	Pc Vibraslap
B 2	1685	Dr RideCym RL
C 3	873	Pc Bongo H1
C#3	872	Pc Bongo L
D 3	858	Pc CongaOpSlp
D#3	857	Pc Conga Opn
E 3	866	Pc TumbaOpen
F 3	875	Pc TmbaleH1-3
F#3	879	Pc TmbaleL1-3
G 3	922	Pc AgogoHi
G#3	923	Pc AgogoLo
A 3	893	Pc Cabasa1-2
A#3	891	Pc MaracasSlr
B 3	936	Pc Whistle
C 4	936	Pc Whistle
C#4	926	Pc GuiroShort
D 4	925	Pc GuiroLong
D#4	933	Pc Clave
E 4	934	Pc WoodBlock
F 4	934	Pc WoodBlock
F#4	871	Pc CuicaHi
G 4	870	Pc CuicaLo
G#4	939	Pc TriangleMt
A 4	938	Pc TriangleOp
A#4	899	Pc Shaker 1
B 4	951	Pc SleighBel
C 5	952	Pc BellTree
C#5	1114	Dr SdBldSt1-4
D 5	1274	Dr SdBlL1-3
D#5	1317	Dr SdHipSt1-2
E 5	1214	Dr SdFkSt1-3
F 5	1136	Dr SdSolSt2-4
F#5	1355	Dr SdLdwHMono
G 5	1358	Dr SdHeavy
G#5	1297	Dr SdTgtSt1-4
A 5	1285	Dr SdBhSt1/3
A#5	972	Dr BdSnap1-2
B 5	981	Dr BdTigt1-2
C 6	1008	Dr BdFkSt1-2

PRE 3 NewRock

Нота	№ сигнала	Наименование сигнала
C 0	933	Pc Clave
C#0	1391	Dr SdBrMtSt
D 0	1397	Dr SdBrSwrSt
D#0	1394	Dr SdBrMt2St
E 0	1400	Dr SdBSwrAtSt
F 0	1387	Dr SdLvRolSt
F#0	932	Pc Castanet
G 0	1326	Dr SdRkOp1St
G#0	930	Pc Stick
A 0	1032	Dr BdRk1St
A#0	1183	Dr SdRngSt4
B 0	991	Dr BdAmb1
C 1	992	Dr BdAmb2
C#1	1360	Dr SdRkStk1St
D 1	1175	Dr SdRngSt1-3
D#1	953	Pc ClapT9
E 1	1154	Dr SdPwrSt1-4
F 1	1636	Dr TomFlr St
F#1	1558	Dr HHClRkStSw
G 1	1632	Dr TomLow St
G#1	1586	Dr HHHfOpRkSt
A 1	1632	Dr TomLow St
A#1	1584	Dr HHOpRkSt
B 1	1628	Dr TomMid St
C 2	1628	Dr TomMid St
C#2	1669	Dr CrashCymRL
D 2	1624	Dr TomHi St
D#2	1686	Dr RideSt
E 2	1701	Dr ChinaSt
F 2	1694	Dr CupSt
F#2	912	Pc TambrnSw
G 2	1706	Dr SplashSt
G#2	946	Pc Cowbell2
A 2	1666	Dr CrashCymSt
A#2	935	Pc Vibraslap
B 2	1693	Dr RideCup RL
C 3	873	Pc Bongo H1
C#3	872	Pc Bongo L
D 3	859	Pc CongaTip
D#3	857	Pc Conga Opn
E 3	866	Pc TumbaOpen
F 3	875	Pc TmbaleH1-3
F#3	879	Pc TmbaleL1-3
G 3	922	Pc AgogoHi
G#3	923	Pc AgogoLo
A 3	893	Pc Cabasa1-2
A#3	891	Pc MaracasSlr
B 3	936	Pc Whistle
C 4	936	Pc Whistle
C#4	926	Pc GuiroShort
D 4	925	Pc GuiroLong
D#4	933	Pc Clave
E 4	934	Pc WoodBlock
F 4	934	Pc WoodBlock
F#4	871	Pc CuicaHi
G 4	870	Pc CuicaLo
G#4	939	Pc TriangleMt
A 4	938	Pc TriangleOp
A#4	899	Pc Shaker 1
B 4	951	Pc SleighBel
C 5	952	Pc BellTree
C#5	1274	Dr SdBlL1-3
D 5	1297	Dr SdTgtSt1-4
D#5	1290	Dr SdBhR1-3
E 5	1317	Dr SdHipSt1-2
F 5	1020	Dr BdLoSt
F#5	1355	Dr SdLdwHMono
G 5	1075	Dr BdR&B1
G#5	1358	Dr SdHeavy
A 5	1043	Dr BdRoom1
A#5	1352	Dr SdAmb
B 5	1029	Dr BdFkSonSt
C 6	1044	Dr BdRoom2

PRE 4 RockSt1

Нота	№ сигнала	Наименование сигнала
C 0	971	Pc AnaClick
C#0	1391	Dr SdBrMtSt
D 0	1397	Dr SdBrSwrSt
D#0	1394	Dr SdBrMt2St
E 0	1400	Dr SdBSwrAtSt
F 0	1381	Dr SdRkRolSt
F#0	932	Pc Castanet
G 0	1335	Dr SdRkOp2St
G#0	930	Pc Stick
A 0	992	Dr BdAmb2
A#0	1332	Dr SdRkRim1St
B 0	1035	Dr BdRk2St
C 1	1032	Dr BdRk1St
C#1	1360	Dr SdRkStk1St
D 1	1326	Dr SdRkOp1St
D#1	940	Pc HandClapSt
E 1	1329	Dr SdRkMte1St
F 1	1648	Dr TomRkLoSt
F#1	1558	Dr HHClRkStSw
G 1	1648	Dr TomRkLoSt
G#1	1570	Dr HHPdRkStSw
A 1	1644	Dr TomRkMdSt
A#1	1582	Dr HHOpRkStSw
B 1	1644	Dr TomRkMdSt
C 2	1640	Dr TomRkHiSt
C#2	1669	Dr CrashCymRL
D 2	1640	Dr TomRkHiSt
D#2	1686	Dr RideSt
E 2	1701	Dr ChinaSt
F 2	1694	Dr CupSt
F#2	963	Pc TambrnRX5
G 2	1706	Dr SplashSt
G#2	945	Pc Cowbell1
A 2	1666	Dr CrashCymSt
A#2	935	Pc Vibraslap
B 2	1689	Dr RideRL
C 3	873	Pc Bongo H1
C#3	872	Pc Bongo L
D 3	859	Pc CongaTip
D#3	857	Pc Conga Opn
E 3	866	Pc TumbaOpen
F 3	875	Pc TmbaleH1-3
F#3	879	Pc TmbaleL1-3
G 3	922	Pc AgogoHi
G#3	923	Pc AgogoLo
A 3	893	Pc Cabasa1-2
A#3	891	Pc MaracasSlr
B 3	936	Pc Whistle
C 4	936	Pc Whistle
C#4	926	Pc GuiroShort
D 4	925	Pc GuiroLong
D#4	933	Pc Clave
E 4	934	Pc WoodBlock
F 4	934	Pc WoodBlock
F#4	871	Pc CuicaHi
G 4	870	Pc CuicaLo
G#4	939	Pc TriangleMt
A 4	938	Pc TriangleOp
A#4	899	Pc Shaker 1
B 4	951	Pc SleighBel
C 5	952	Pc BellTree
C#5	1344	Dr SdRkFlmSt
D 5	1335	Dr SdRkOp2St
D#5	1341	Dr SdRkRim2St
E 5	1338	Dr SdRkMte2St
F 5	1009	Dr BdFk1St
F#5	1384	Dr SdRkRolDSt
G 5	1023	Dr BdHSonSt
G#5	1297	Dr SdTgtSt1-4
A 5	1029	Dr BdFkSonSt
A#5	1255	Dr SdSon3St
B 5	1012	Dr BdFkR1-2
C 6	1023	Dr BdHSonSt

PRE 5 RockSt2

Нота	№ сигнала	Наименование сигнала
C 0	971	Pc AnaClick
C#0	1391	Dr SdBrMtSt
D 0	1397	Dr SdBrSwrSt
D#0	1394	Dr SdBrMt2St
E 0	1400	Dr SdBSwrAtSt
F 0	1381	Dr SdRkRolSt
F#0	932	Pc Castanet
G 0	1335	Dr SdRkOp2St
G#0	930	Pc Stick
A 0	991	Dr BdAmb1
A#0	1341	Dr SdRkRim2St
B 0	992	Dr BdAmb2
C 1	1035	Dr BdRk2St
C#1	1363	Dr SdRkStk2St
D 1	1335	Dr SdRkOp2St
D#1	940	Pc HandClapSt
E 1	1338	Dr SdRkMte2St
F 1	1648	Dr TomRkLoSt
F#1	1574	Dr HHClRk2St
G 1	1648	Dr TomRkLoSt
G#1	1586	Dr HHHfOpRkSt
A 1	1644	Dr TomRkMdSt
A#1	1584	Dr HHOpRkSt
B 1	1644	Dr TomRkMdSt
C 2	1640	Dr TomRkHiSt
C#2	1670	Dr CrashSt
D 2	1640	Dr TomRkHiSt
D#2	1686	Dr RideSt
E 2	1701	Dr ChinaSt
F 2	1694	Dr CupSt
F#2	963	Pc TambrnRX5
G 2	1706	Dr SplashSt
G#2	945	Pc Cowbell1
A 2	1673	Dr CrashRL
A#2	935	Pc Vibraslap
B 2	1689	Dr RideRL
C 3	873	Pc Bongo H1
C#3	872	Pc Bongo L
D 3	859	Pc CongaTip
D#3	857	Pc Conga Opn
E 3	866	Pc TumbaOpen
F 3	875	Pc TmbaleH1-3
F#3	879	Pc TmbaleL1-3
G 3	922	Pc AgogoHi
G#3	923	Pc AgogoLo
A 3	893	Pc Cabasa1-2
A#3	891	Pc MaracasSlr
B 3	936	Pc Whistle
C 4	936	Pc Whistle
C#4	926	Pc GuiroShort
D 4	925	Pc GuiroLong
D#4	933	Pc Clave
E 4	934	Pc WoodBlock
F 4	934	Pc WoodBlock
F#4	871	Pc CuicaHi
G 4	870	Pc CuicaLo
G#4	939	Pc TriangleMt
A 4	938	Pc TriangleOp
A#4	899	Pc Shaker 1
B 4	951	Pc SleighBel
C 5	952	Pc BellTree
C#5	1344	Dr SdRkFlmSt
D 5	1326	Dr SdRkOp1St
D#5	1332	Dr SdRkRim1St
E 5	1329	Dr SdRkMte1St
F 5	1032	Dr BdRk1St
F#5	1384	Dr SdRkRolDSt
G 5	1010	Dr BdFk2St
G#5	1297	Dr SdTgtSt1-4
A 5	1017	Dr BdHiSt
A#5	1256	Dr SdSon4St
B 5	1026	Dr BdLSonSt
C 6	1032	Dr BdRk1St

PRE 6 RockMono1

Нота	№ сигнала	Наименование сигнала
C 0	971	Pc AnaClick
C#0	1392	Dr SdBrMtL
D 0	1398	Dr SdBrSwrL
D#0	1395	Dr SdBrMt2L
E 0	1401	Dr SdBrSwrAtL
F 0	1388	Dr SdLvRolL
F#0	932	Pc Castanet
G 0	1307	Dr SdTgtL1-4
G#0	930	Pc Stick
A 0	1038	Dr BdDry1
A#0	1296	Dr SdBh3R
B 0	1007	Dr BdNm2R
C 1	1045	Dr BdRoom3
C#1	1379	Dr SdClRim2
D 1	1263	Dr SdSon3L
D#1	941	Pc HandClapL
E 1	1266	Dr SdSon4R
F 1	1637	Dr TomFlr L
F#1	1576	Dr HHClRk2R
G 1	1633	Dr TomLow L
G#1	1580	Dr HHPdlRkR
A 1	1629	Dr TomMid L
A#1	1590	Dr HHOpRkR
B 1	1629	Dr TomMid L
C 2	1626	Dr TomHi R
C#2	1671	Dr CrashL
D 2	1626	Dr TomHi R
D#2	1698	Dr RideMono
E 2	1701	Dr ChinaSt
F 2	1700	Dr CupMono2
F#2	912	Pc TambrnSw
G 2	1708	Dr SplashR
G#2	945	Pc Cowbell1
A 2	1671	Dr CrashL
A#2	935	Pc Vibraslap
B 2	1698	Dr RideMono
C 3	873	Pc Bongo H1
C#3	872	Pc Bongo L
D 3	859	Pc CongaTip
D#3	857	Pc Conga Opn
E 3	866	Pc TumbaOpen
F 3	875	Pc TmbaleH1-3
F#3	879	Pc TmbaleL1-3
G 3	922	Pc AgogoHi
G#3	923	Pc AgogoLo
A 3	893	Pc Cabasa1-2
A#3	891	Pc MaracasSlr
B 3	936	Pc Whistle
C 4	936	Pc Whistle
C#4	926	Pc GuiroShort
D 4	925	Pc GuiroLong
D#4	933	Pc Clave
E 4	934	Pc WoodBlock
F 4	934	Pc WoodBlock
F#4	871	Pc CuicaHi
G 4	870	Pc CuicaLo
G#4	939	Pc TriangleMt
A 4	938	Pc TriangleOp
A#4	899	Pc Shaker 1
B 4	951	Pc SleighBel
C 5	952	Pc BellTree
C#5	1378	Dr SdClRmR
D 5	1358	Dr SdHeavy
D#5	1334	Dr SdRkRim1R
E 5	1355	Dr SdLdwHMono
F 5	1036	Dr BdRk2L
F#5	1321	Dr SdHipR1-2
G 5	1082	Dr BdBreakHrd
G#5	1316	Dr SdTgt4R
A 5	1018	Dr BdHiL
A#5	1290	Dr SdBhR1-3
B 5	1015	Dr BdFkHL
C 6	1030	Dr BdFkSonL

PRE 7 RockMono2

Нота	№ сигнала	Наименование сигнала
C 0	971	Pc AnaClick
C#0	1392	Dr SdBrMtL
D 0	1398	Dr SdBrSwrL
D#0	1395	Dr SdBrMt2L
E 0	1401	Dr SdBrSwrAtL
F 0	1388	Dr SdLvRolL
F#0	932	Pc Castanet
G 0	1312	Dr SdTgt2R
G#0	930	Pc Stick
A 0	1040	Dr BdPop
A#0	1315	Dr SdTgt4L
B 0	1007	Dr BdNm2R
C 1	1038	Dr BdDry1
C#1	1378	Dr SdClRmR
D 1	1275	Dr SdBlR1-3
D#1	941	Pc HandClapL
E 1	1308	Dr SdTgtR1-4
F 1	1649	Dr TomRkLoL
F#1	1576	Dr HHClRk2R
G 1	1649	Dr TomRkLoL
G#1	1580	Dr HHPdlRkR
A 1	1645	Dr TomRkMdL
A#1	1590	Dr HHOpRkR
B 1	1645	Dr TomRkMdL
C 2	1642	Dr TomRkHiR
C#2	1671	Dr CrashL
D 2	1642	Dr TomRkHiR
D#2	1688	Dr RideR
E 2	1703	Dr ChinaR
F 2	1696	Dr CupR
F#2	963	Pc TambrnRX5
G 2	1708	Dr SplashR
G#2	945	Pc Cowbell1
A 2	1671	Dr CrashL
A#2	935	Pc Vibraslap
B 2	1698	Dr RideMono
C 3	873	Pc Bongo H1
C#3	872	Pc Bongo L
D 3	859	Pc CongaTip
D#3	857	Pc Conga Opn
E 3	866	Pc TumbaOpen
F 3	875	Pc TmbaleH1-3
F#3	879	Pc TmbaleL1-3
G 3	922	Pc AgogoHi
G#3	923	Pc AgogoLo
A 3	893	Pc Cabasa1-2
A#3	891	Pc MaracasSlr
B 3	936	Pc Whistle
C 4	936	Pc Whistle
C#4	926	Pc GuiroShort
D 4	925	Pc GuiroLong
D#4	933	Pc Clave
E 4	934	Pc WoodBlock
F 4	934	Pc WoodBlock
F#4	871	Pc CuicaHi
G 4	870	Pc CuicaLo
G#4	939	Pc TriangleMt
A 4	938	Pc TriangleOp
A#4	899	Pc Shaker 1
B 4	951	Pc SleighBel
C 5	952	Pc BellTree
C#5	1364	Dr SdRkStk2L
D 5	1351	Dr SdMdRim
D#5	1325	Dr SdHip2R
E 5	1350	Dr SdMid
F 5	1043	Dr BdRoom1
F#5	1313	Dr SdTgt3L
G 5	1077	Dr BdHipDp
G#5	1316	Dr SdTgt4R
A 5	1025	Dr BdHSonR
A#5	1327	Dr SdRkOp1L
B 5	1040	Dr BdPop
C 6	1044	Dr BdRoom2

PRE 8 Hip Hop1

Нота	№ сигнала	Наименование сигнала
C 0	1367	Dr SdHpStk2
C#0	815	Se VoxHitRev
D 0	821	Se TurnTable
D#0	768	Me HitBrass
E 0	844	Se ScratchSdR
F 0	1389	Dr SdLvRolR
F#0	969	Pc ClaveT8
G 0	1325	Dr SdHip2R
G#0	1373	Dr SdHpStk6R
A 0	1077	Dr BdHipDp
A#0	1488	Dr SdDodgL
B 0	1063	Dr BdT8-3
C 1	1062	Dr BdT8-2
C#1	1367	Dr SdHpStk2
D 1	1484	Dr SdClpAna
D#1	942	Pc HandClapR
E 1	1465	Dr SdR&B2
F 1	1660	Dr TomT8
F#1	1599	Dr HHClT8-1
G 1	1660	Dr TomT8
G#1	1600	Dr HHOpT8-1
A 1	1660	Dr TomT8
A#1	1600	Dr HHOpT8-1
B 1	1660	Dr TomT8
C 2	1660	Dr TomT8
C#2	1675	Dr Crash2
D 2	1660	Dr TomT8
D#2	1688	Dr RideR
E 2	1711	Dr CrashT8
F 2	1713	Dr RideT9
F#2	963	Pc TambrnRX5
G 2	1708	Dr SplashR
G#2	949	Pc MamboBdy
A 2	1710	Dr CrashT9
A#2	935	Pc Vibraslap
B 2	1713	Dr RideT9
C 3	873	Pc Bongo H1
C#3	872	Pc Bongo L
D 3	859	Pc CongaTip
D#3	857	Pc Conga Opn
E 3	866	Pc TumbaOpen
F 3	875	Pc TmbaleH1-3
F#3	879	Pc TmbaleL1-3
G 3	922	Pc AgogoHi
G#3	923	Pc AgogoLo
A 3	893	Pc Cabasa1-2
A#3	891	Pc MaracasSlr
B 3	936	Pc Whistle
C 4	936	Pc Whistle
C#4	926	Pc GuiroShort
D 4	925	Pc GuiroLong
D#4	933	Pc Clave
E 4	934	Pc WoodBlock
F 4	934	Pc WoodBlock
F#4	871	Pc CuicaHi
G 4	870	Pc CuicaLo
G#4	939	Pc TriangleMt
A 4	938	Pc TriangleOp
A#4	899	Pc Shaker 1
B 4	951	Pc SleighBel
C 5	952	Pc BellTree
C#5	1375	Dr SdHipStk8
D 5	1457	Dr SdJngl3
D#5	942	Pc HandClapR
E 5	1474	Dr SdHipRm5
F 5	834	Se Scratch H
F#5	835	Se Scratch L
G 5	836	Se ScratchDwn
G#5	838	Se ScratchHiR
A 5	841	Se ScratchBdF
A#5	853	Se ScratchCmb
B 5	846	Se ScratchVoR
C 6	1080	Dr BdBreak2

PRE 9 Hip Hop2

Нота	№ сигнала	Наименование сигнала
C 0	1063	Dr BdT8-3
C#0	1448	Dr SdT8Rim
D 0	1466	Dr SdHip1
D#0	953	Pc ClapT9
E 0	1491	Dr SdSyn
F 0	1389	Dr SdLvRolR
F#0	1369	Dr SdHpStk4
G 0	495	Pc DjembeEd
G#0	1371	Dr SdHpStk6St
A 0	1061	Dr BdT8-1
A#0	1464	Dr SdR&B1Rm
B 0	1081	Dr BdBreakHvy
C 1	1077	Dr BdHipDp
C#1	1446	Dr SdT8-4
D 1	1468	Dr SdHip3
D#1	940	Pc HandClapSt
E 1	1496	Dr SdLofi
F 1	1638	Dr TomFlr R
F#1	1617	Dr HHClLoFi
G 1	1633	Dr TomLow L
G#1	1606	Dr HHClBreak
A 1	1633	Dr TomLow L
A#1	1618	Dr HHOpLoFi
B 1	1633	Dr TomLow L
C 2	1625	Dr TomHi L
C#2	1674	Dr Crash
D 2	1625	Dr TomHi L
D#2	1713	Dr RideT9
E 2	1705	Dr China
F 2	1699	Dr CupMono
F#2	963	Pc TambrnRX5
G 2	1674	Dr Crash
G#2	959	Pc CowBelRX11
A 2	1672	Dr CrashR
A#2	958	Pc CowBelT8
B 2	1713	Dr RideT9
C 3	873	Pc Bongo H1
C#3	872	Pc Bongo L
D 3	859	Pc CongaTip
D#3	858	Pc CongaOpSlp
E 3	857	Pc Conga Opn
F 3	753	Me RadioNz
F#3	753	Me RadioNz
G 3	923	Pc AgogoLo
G#3	923	Pc AgogoLo
A 3	894	Pc Cabasa1
A#3	967	Pc MarcsT8
B 3	818	Se FxGun2
C 4	819	Se FxGun1
C#4	848	Se ScratchSpn
D 4	847	Se ScratchStp
D#4	969	Pc ClaveT8
E 4	823	Se DoorSqk
F 4	814	Se HiQ2
F#4	841	Se ScratchBdF
G 4	842	Se ScratchBdR
G#4	939	Pc TriangleMt
A 4	938	Pc TriangleOp
A#4	962	Pc AnaShaker
B 4	913	Pc TambrnHit
C 5	952	Pc BellTree
C#5	1454	Dr SdHuman2
D 5	1479	Dr SdBreakRol
D#5	771	Me StabHard
E 5	1455	Dr SdJngl1
F 5	1032	Dr BdRk1St
F#5	836	Se ScratchDwn
G 5	494	Pc Wataiko
G#5	740	Me HH Hit
A 5	772	Me StabOrgan2
A#5	765	Me Sonar1
B 5	821	Se TurnTable
C 6	822	Se Police

PRE 10 Hip Hop3

Нота	№ сигнала	Наименование сигнала
C 0	1448	Dr SdT8Rim
C#0	815	Se VoxHitRev
D 0	821	Se TurnTable
D#0	771	Me StabHard
E 0	846	Se ScratchVoR
F 0	1390	Dr SdRollMono
F#0	969	Pc ClaveT8
G 0	1323	Dr SdHip1R
G#0	1369	Dr SdHpStk4
A 0	1065	Dr BdAnCR
A#0	1472	Dr SdHipRm3
B 0	1056	Dr BdT9-3
C 1	1077	Dr BdHipDp
C#1	1370	Dr SdHpStk5
D 1	1469	Dr SdHipGate
D#1	942	Pc HandClapR
E 1	1496	Dr SdLofi
F 1	1660	Dr TomT8
F#1	1614	Dr HHClHip
G 1	1660	Dr TomT8
G#1	1615	Dr HHPdlHip
A 1	1660	Dr TomT8
A#1	1616	Dr HHOpHip
B 1	1660	Dr TomT8
C 2	1660	Dr TomT8
C#2	1675	Dr Crash2
D 2	1660	Dr TomT8
D#2	1688	Dr RideR
E 2	1711	Dr CrashT8
F 2	1713	Dr RideT9
F#2	963	Pc TambrnRX5
G 2	1708	Dr SplashR
G#2	949	Pc MamboBdy
A 2	1710	Dr CrashT9
A#2	935	Pc Vibraslap
B 2	1713	Dr RideT9
C 3	873	Pc Bongo H1
C#3	872	Pc Bongo L
D 3	859	Pc CongaTip
D#3	858	Pc CongaOpSlp
E 3	857	Pc Conga Opn
F 3	875	Pc TmbaleH1-3
F#3	879	Pc TmbaleL1-3
G 3	922	Pc AgogoHi
G#3	923	Pc AgogoLo
A 3	902	Pc ShakerHip1
A#3	891	Pc MaracasSlr
B 3	936	Pc Whistle
C 4	936	Pc Whistle
C#4	926	Pc GuiroShort
D 4	925	Pc GuiroLong
D#4	933	Pc Clave
E 4	934	Pc WoodBlock
F 4	934	Pc WoodBlock
F#4	871	Pc CuicaHi
G 4	870	Pc CuicaLo
G#4	939	Pc TriangleMt
A 4	938	Pc TriangleOp
A#4	899	Pc Shaker 1
B 4	951	Pc SleighBel
C 5	952	Pc BellTree
C#5	1366	Dr SdHpStk1
D 5	1455	Dr SdJngl1
D#5	942	Pc HandClapR
E 5	1478	Dr SdBreakHvy
F 5	835	Se Scratch L
F#5	836	Se ScratchDwn
G 5	837	Se ScratchHiF
G#5	839	Se ScratchLoF
A 5	840	Se ScratchLoR
A#5	841	Se ScratchBdF
B 5	842	Se ScratchBdR
C 6	1081	Dr BdBreakHvy

PRE 11 Hip Hop4

Нота	№ сигнала	Наименование сигнала
C 0	1367	Dr SdHpStk2
C#0	814	Se HiQ2
D 0	821	Se TurnTable
D#0	767	Me HitOrch1
E 0	848	Se ScratchSpn
F 0	1383	Dr SdRkRolR
F#0	969	Pc ClaveT8
G 0	1477	Dr SdBreak3
G#0	1374	Dr SdHpStk7
A 0	1076	Dr BdR&B2
A#0	1464	Dr SdR&B1Rm
B 0	1057	Dr BdT9-4
C 1	1055	Dr BdT9-2
C#1	1368	Dr SdHpStk3
D 1	1472	Dr SdHipRm3
D#1	942	Pc HandClapR
E 1	1473	Dr SdHipRm4
F 1	1063	Dr BdT8-3
F#1	1597	Dr HHClT9
G 1	1063	Dr BdT8-3
G#1	1598	Dr HHOpT9
A 1	1063	Dr BdT8-3
A#1	1598	Dr HHOpT9
B 1	1063	Dr BdT8-3
C 2	1063	Dr BdT8-3
C#2	1675	Dr Crash2
D 2	1063	Dr BdT8-3
D#2	1688	Dr RideR
E 2	1711	Dr CrashT8
F 2	1713	Dr RideT9
F#2	963	Pc TambrnRX5
G 2	1708	Dr SplashR
G#2	949	Pc MamboBdy
A 2	1710	Dr CrashT9
A#2	935	Pc Vibraslap
B 2	1713	Dr RideT9
C 3	873	Pc Bongo H1
C#3	872	Pc Bongo L
D 3	859	Pc CongaTip
D#3	858	Pc CongaOpSlp
E 3	857	Pc Conga Opn
F 3	875	Pc TmbaleH1-3
F#3	879	Pc TmbaleL1-3
G 3	922	Pc AgogoHi
G#3	923	Pc AgogoLo
A 3	902	Pc ShakerHip1
A#3	891	Pc MaracasSlr
B 3	936	Pc Whistle
C 4	936	Pc Whistle
C#4	926	Pc GuiroShort
D 4	925	Pc GuiroLong
D#4	933	Pc Clave
E 4	934	Pc WoodBlock
F 4	934	Pc WoodBlock
F#4	871	Pc CuicaHi
G 4	870	Pc CuicaLo
G#4	939	Pc TriangleMt
A 4	938	Pc TriangleOp
A#4	899	Pc Shaker 1
B 4	951	Pc SleighBel
C 5	952	Pc BellTree
C#5	1376	Dr SdClRmSt
D 5	1458	Dr SdJnglFx
D#5	942	Pc HandClapR
E 5	1479	Dr SdBreakRol
F 5	838	Se ScratchHiR
F#5	839	Se ScratchLoF
G 5	840	Se ScratchLoR
G#5	841	Se ScratchBdF
A 5	842	Se ScratchBdR
A#5	843	Se ScratchSdF
B 5	844	Se ScratchSdR
C 6	1082	Dr BdBreakHrd

PRE 12 Hip Hop5

Нота	№ сигнала	Наименование сигнала
C 0	1366	Dr SdHpStk1
C#0	813	Se HiQ1
D 0	821	Se TurnTable
D#0	774	Me Hit Uhh
E 0	847	Se ScratchStp
F 0	1388	Dr SdLvRolL
F#0	969	Pc ClaveT8
G 0	1486	Dr SdCut
G#0	1362	Dr SnRkStk1R
A 0	1055	Dr BdT9-2
A#0	1470	Dr SdHipRm1
B 0	1061	Dr BdT8-1
C 1	1078	Dr BdBrkDp
C#1	1380	Dr SdClRim3
D 1	1471	Dr SdHipRm2
D#1	942	Pc HandClapR
E 1	1463	Dr SdR&B1
F 1	957	Pc CongaT8
F#1	1599	Dr HHClT8-1
G 1	957	Pc CongaT8
G#1	1601	Dr HHClT8-2
A 1	957	Pc CongaT8
A#1	1602	Dr HHOpT8-2
B 1	957	Pc CongaT8
C 2	957	Pc CongaT8
C#2	1675	Dr Crash2
D 2	957	Pc CongaT8
D#2	1688	Dr RideR
E 2	1711	Dr CrashT8
F 2	1713	Dr RideT9
F#2	963	Pc TambrnRX5
G 2	1708	Dr SplashR
G#2	949	Pc MamboBdy
A 2	1710	Dr CrashT9
A#2	935	Pc Vibraslap
B 2	1713	Dr RideT9
C 3	873	Pc Bongo H1
C#3	872	Pc Bongo L
D 3	859	Pc CongaTip
D#3	857	Pc Conga Opn
E 3	866	Pc TumbaOpen
F 3	875	Pc TmbaleH1-3
F#3	879	Pc TmbaleL1-3
G 3	922	Pc AgogoHi
G#3	923	Pc AgogoLo
A 3	893	Pc Cabasa1-2
A#3	891	Pc MaracasSlr
B 3	936	Pc Whistle
C 4	936	Pc Whistle
C#4	926	Pc GuiroShort
D 4	925	Pc GuiroLong
D#4	933	Pc Clave
E 4	934	Pc WoodBlock
F 4	934	Pc WoodBlock
F#4	871	Pc CuicaHi
G 4	870	Pc CuicaLo
G#4	939	Pc TriangleMt
A 4	938	Pc TriangleOp
A#4	899	Pc Shaker 1
B 4	951	Pc SleighBel
C 5	952	Pc BellTree
C#5	1378	Dr SdClRmR
D 5	1450	Dr SdAnSmRim
D#5	940	Pc HandClapSt
E 5	1468	Dr SdHip3
F 5	844	Se ScratchSdR
F#5	849	Se ScratchHip
G 5	842	Se ScratchBdR
G#5	846	Se ScratchVoR
A 5	850	Se ScratchHp2
A#5	854	Se ScratchCb2
B 5	856	Se ScratchCb4
C 6	1077	Dr BdHipDp

PRE 13 Hip Hop6

Нота	№ сигнала	Наименование сигнала
C 0	1366	Dr SdHpStk1
C#0	797	Se Zap2
D 0	821	Se TurnTable
D#0	790	Se Ripper
E 0	850	Se ScratchHp2
F 0	1388	Dr SdLvRolL
F#0	969	Pc ClaveT8
G 0	1476	Dr SdBreak2
G#0	1364	Dr SdRkStk2L
A 0	1043	Dr BdRoom1
A#0	1468	Dr SdHip3
B 0	1056	Dr BdT9-3
C 1	1075	Dr BdR&B1
C#1	1364	Dr SdRkStk2L
D 1	1466	Dr SdHip1
D#1	942	Pc HandClapR
E 1	1467	Dr SdHip2
F 1	957	Pc CongaT8
F#1	1614	Dr HHClHip
G 1	957	Pc CongaT8
G#1	1615	Dr HHPdlHip
A 1	957	Pc CongaT8
A#1	1616	Dr HHOpHip
B 1	957	Pc CongaT8
C 2	957	Pc CongaT8
C#2	1675	Dr Crash2
D 2	957	Pc CongaT8
D#2	1688	Dr RideR
E 2	1711	Dr CrashT8
F 2	1713	Dr RideT9
F#2	963	Pc TambrnRX5
G 2	1708	Dr SplashR
G#2	949	Pc MamboBdy
A 2	1710	Dr CrashT9
A#2	935	Pc Vibraslap
B 2	1713	Dr RideT9
C 3	873	Pc Bongo H1
C#3	872	Pc Bongo L
D 3	859	Pc CongaTip
D#3	857	Pc Conga Opn
E 3	866	Pc TumbaOpen
F 3	875	Pc TmbaleH1-3
F#3	879	Pc TmbaleL1-3
G 3	922	Pc AgogoHi
G#3	923	Pc AgogoLo
A 3	893	Pc Cabasa1-2
A#3	891	Pc MaracasSlr
B 3	936	Pc Whistle
C 4	936	Pc Whistle
C#4	926	Pc GuiroShort
D 4	925	Pc GuiroLong
D#4	933	Pc Clave
E 4	934	Pc WoodBlock
F 4	934	Pc WoodBlock
F#4	871	Pc CuicaHi
G 4	870	Pc CuicaLo
G#4	939	Pc TriangleMt
A 4	938	Pc TriangleOp
A#4	899	Pc Shaker 1
B 4	951	Pc SleighBel
C 5	952	Pc BellTree
C#5	1380	Dr SdClRim3
D 5	1449	Dr SdAnSm
D#5	940	Pc HandClapSt
E 5	1465	Dr SdR&B2
F 5	834	Se Scratch H
F#5	835	Se Scratch L
G 5	836	Se ScratchDwn
G#5	837	Se ScratchHiF
A 5	838	Se ScratchHiR
A#5	839	Se ScratchLoF
B 5	840	Se ScratchLoR
C 6	1071	Dr BdJngl2

PRE 14 HipStick1

Нота	№ сигнала	Наименование сигнала
C 0	1473	Dr SdHipRm4
C#0	813	Se HiQ1
D 0	821	Se TurnTable
D#0	767	Me HitOrch1
E 0	842	Se ScratchBdR
F 0	1389	Dr SdLvRolR
F#0	971	Pc AnaClick
G 0	1472	Dr SdHipRm3
G#0	1452	Dr SdAnCRRim
A 0	1077	Dr BdHipDp
A#0	1450	Dr SdAnSmRim
B 0	1063	Dr BdT8-3
C 1	1062	Dr BdT8-2
C#1	1448	Dr SdT8Rim
D 1	1366	Dr SdHpStk1
D#1	942	Pc HandClapR
E 1	1367	Dr SdHpStk2
F 1	1660	Dr TomT8
F#1	1599	Dr HHClT8-1
G 1	1660	Dr TomT8
G#1	1600	Dr HHOpT8-1
A 1	1660	Dr TomT8
A#1	1600	Dr HHOpT8-1
B 1	1660	Dr TomT8
C 2	1660	Dr TomT8
C#2	1675	Dr Crash2
D 2	1660	Dr TomT8
D#2	1688	Dr RideR
E 2	1711	Dr CrashT8
F 2	1713	Dr RideT9
F#2	963	Pc TambrnRX5
G 2	1708	Dr SplashR
G#2	949	Pc MamboBdy
A 2	1710	Dr CrashT9
A#2	935	Pc Vibraslap
B 2	1713	Dr RideT9
C 3	873	Pc Bongo H1
C#3	872	Pc Bongo L
D 3	859	Pc CongaTip
D#3	857	Pc Conga Opn
E 3	866	Pc TumbaOpen
F 3	875	Pc TmbaleH1-3
F#3	879	Pc TmbaleL1-3
G 3	922	Pc AgogoHi
G#3	923	Pc AgogoLo
A 3	893	Pc Cabasa1-2
A#3	891	Pc MaracasSlr
B 3	936	Pc Whistle
C 4	936	Pc Whistle
C#4	926	Pc GuiroShort
D 4	925	Pc GuiroLong
D#4	933	Pc Clave
E 4	934	Pc WoodBlock
F 4	934	Pc WoodBlock
F#4	871	Pc CuicaHi
G 4	870	Pc CuicaLo
G#4	939	Pc TriangleMt
A 4	938	Pc TriangleOp
A#4	899	Pc Shaker 1
B 4	951	Pc SleighBel
C 5	952	Pc BellTree
C#5	1449	Dr SdAnSm
D 5	1380	Dr SdClRim3
D#5	971	Pc AnaClick
E 5	1379	Dr SdClRim2
F 5	834	Se Scratch H
F#5	835	Se Scratch L
G 5	836	Se ScratchDwn
G#5	838	Se ScratchHiR
A 5	841	Se ScratchBdF
A#5	853	Se ScratchCmb
B 5	846	Se ScratchVoR
C 6	1071	Dr BdJngl2

PRE 15 HipStick2

Нота	№ сигнала	Наименование сигнала
C 0	1473	Dr SdHipRm4
C#0	795	Se NzBurst
D 0	821	Se TurnTable
D#0	774	Me Hit Uhh
E 0	842	Se ScratchBdR
F 0	1389	Dr SdLvRolR
F#0	969	Pc ClaveT8
G 0	1450	Dr SdAnSmRim
G#0	1469	Dr SdHipGate
A 0	1056	Dr BdT9-3
A#0	1448	Dr SdT8Rim
B 0	1062	Dr BdT8-2
C 1	1054	Dr BdT9-1
C#1	1472	Dr SdHipRm3
D 1	1368	Dr SdHpStk3
D#1	942	Pc HandClapR
E 1	1369	Dr SdHpStk4
F 1	1659	Dr TomT9Lo
F#1	1597	Dr HHClT9
G 1	1659	Dr TomT9Lo
G#1	1598	Dr HHOpT9
A 1	1659	Dr TomT9Lo
A#1	1598	Dr HHOpT9
B 1	1658	Dr TomT9Hi
C 2	1658	Dr TomT9Hi
C#2	1675	Dr Crash2
D 2	1658	Dr TomT9Hi
D#2	1688	Dr RideR
E 2	1711	Dr CrashT8
F 2	1713	Dr RideT9
F#2	963	Pc TambrnRX5
G 2	1708	Dr SplashR
G#2	949	Pc MamboBdy
A 2	1710	Dr CrashT9
A#2	935	Pc Vibraslap
B 2	1713	Dr RideT9
C 3	873	Pc Bongo H1
C#3	872	Pc Bongo L
D 3	859	Pc CongaTip
D#3	858	Pc CongaOpSlp
E 3	857	Pc Conga Opn
F 3	875	Pc TmbaleH1-3
F#3	879	Pc TmbaleL1-3
G 3	922	Pc AgogoHi
G#3	923	Pc AgogoLo
A 3	902	Pc ShakerHip1
A#3	891	Pc MaracasSlr
B 3	936	Pc Whistle
C 4	936	Pc Whistle
C#4	926	Pc GuiroShort
D 4	925	Pc GuiroLong
D#4	933	Pc Clave
E 4	934	Pc WoodBlock
F 4	934	Pc WoodBlock
F#4	871	Pc CuicaHi
G 4	870	Pc CuicaLo
G#4	939	Pc TriangleMt
A 4	938	Pc TriangleOp
A#4	899	Pc Shaker 1
B 4	951	Pc SleighBel
C 5	952	Pc BellTree
C#5	1450	Dr SdAnSmRim
D 5	1378	Dr SdClRmR
D#5	1473	Dr SdHipRm4
E 5	1380	Dr SdClRim3
F 5	835	Se Scratch L
F#5	836	Se ScratchDwn
G 5	837	Se ScratchHiF
G#5	839	Se ScratchLoF
A 5	842	Se ScratchBdR
A#5	854	Se ScratchCb2
B 5	847	Se ScratchStp
C 6	1069	Dr BdBlpHd

PRE 16 HipStick3

Нота	№ сигнала	Наименование сигнала
C 0	1490	Dr SdFMRim
C#0	816	Se Bomb
D 0	821	Se TurnTable
D#0	776	Me VoxDrum
E 0	841	Se ScratchBdF
F 0	1389	Dr SdLvRolR
F#0	934	Pc WoodBlock
G 0	1452	Dr SdAnCRRim
G#0	1468	Dr SdHip3
A 0	1063	Dr BdT8-3
A#0	1442	Dr SdT9Rim
B 0	1061	Dr BdT8-1
C 1	1055	Dr BdT9-2
C#1	1473	Dr SdHipRm4
D 1	1370	Dr SdHpStk5
D#1	942	Pc HandClapR
E 1	1371	Dr SdHpStk6St
F 1	1063	Dr BdT8-3
F#1	1614	Dr HHClHip
G 1	1063	Dr BdT8-3
G#1	1615	Dr HHPdlHip
A 1	1063	Dr BdT8-3
A#1	1616	Dr HHOpHip
B 1	1063	Dr BdT8-3
C 2	1063	Dr BdT8-3
C#2	1675	Dr Crash2
D 2	1063	Dr BdT8-3
D#2	1688	Dr RideR
E 2	1711	Dr CrashT8
F 2	1713	Dr RideT9
F#2	963	Pc TambrnRX5
G 2	1708	Dr SplashR
G#2	949	Pc MamboBdy
A 2	1710	Dr CrashT9
A#2	935	Pc Vibraslap
B 2	1713	Dr RideT9
C 3	873	Pc Bongo H1
C#3	872	Pc Bongo L
D 3	859	Pc CongaTip
D#3	857	Pc Conga Opn
E 3	866	Pc TumbaOpen
F 3	875	Pc TmbaleH1-3
F#3	879	Pc TmbaleL1-3
G 3	922	Pc AgogoHi
G#3	923	Pc AgogoLo
A 3	893	Pc Cabasa1-2
A#3	891	Pc MaracasSlr
B 3	936	Pc Whistle
C 4	936	Pc Whistle
C#4	926	Pc GuiroShort
D 4	925	Pc GuiroLong
D#4	933	Pc Clave
E 4	934	Pc WoodBlock
F 4	934	Pc WoodBlock
F#4	871	Pc CuicaHi
G 4	870	Pc CuicaLo
G#4	939	Pc TriangleMt
A 4	938	Pc TriangleOp
A#4	899	Pc Shaker 1
B 4	951	Pc SleighBel
C 5	952	Pc BellTree
C#5	1450	Dr SdAnSmRim
D 5	1378	Dr SdClRmR
D#5	1473	Dr SdHipRm4
E 5	1379	Dr SdClRim2
F 5	835	Se Scratch L
F#5	836	Se ScratchDwn
G 5	837	Se ScratchHiF
G#5	839	Se ScratchLoF
A 5	842	Se ScratchBdR
A#5	854	Se ScratchCb2
B 5	847	Se ScratchStp
C 6	1068	Dr BdBlip

PRE 17 HipStick4

Нота	№ сигнала	Наименование сигнала
C 0	1497	Dr SdRimSE
C#0	953	Pc ClapT9
D 0	821	Se TurnTable
D#0	816	Se Bomb
E 0	853	Se ScratchCmb
F 0	1390	Dr SdRollMono
F#0	1442	Dr SdT9Rim
G 0	1472	Dr SdHipRm3
G#0	1455	Dr SdJngl1
A 0	1045	Dr BdRoom3
A#0	1372	Dr SdHpStk6L
B 0	1056	Dr BdT9-3
C 1	1057	Dr BdT9-4
C#1	1473	Dr SdHipRm4
D 1	1374	Dr SdHpStk7
D#1	942	Pc HandClapR
E 1	1375	Dr SdHipStk8
F 1	957	Pc CongaT8
F#1	1612	Dr HHClTek
G 1	957	Pc CongaT8
G#1	1604	Dr HHClAnCR
A 1	957	Pc CongaT8
A#1	1613	Dr HHOpTek
B 1	957	Pc CongaT8
C 2	957	Pc CongaT8
C#2	1675	Dr Crash2
D 2	957	Pc CongaT8
D#2	1688	Dr RideR
E 2	1711	Dr CrashT8
F 2	1713	Dr RideT9
F#2	963	Pc TambrnRX5
G 2	1708	Dr SplashR
G#2	949	Pc MamboBdy
A 2	1710	Dr CrashT9
A#2	935	Pc Vibraslap
B 2	1713	Dr RideT9
C 3	873	Pc Bongo H1
C#3	872	Pc Bongo L
D 3	859	Pc CongaTip
D#3	857	Pc Conga Opn
E 3	866	Pc TumbaOpen
F 3	875	Pc TmbaleH1-3
F#3	879	Pc TmbaleL1-3
G 3	922	Pc AgogoHi
G#3	923	Pc AgogoLo
A 3	893	Pc Cabasa1-2
A#3	891	Pc MaracasSlr
B 3	936	Pc Whistle
C 4	936	Pc Whistle
C#4	926	Pc GuiroShort
D 4	925	Pc GuiroLong
D#4	933	Pc Clave
E 4	934	Pc WoodBlock
F 4	934	Pc WoodBlock
F#4	871	Pc CuicaHi
G 4	870	Pc CuicaLo
G#4	939	Pc TriangleMt
A 4	938	Pc TriangleOp
A#4	899	Pc Shaker 1
B 4	951	Pc SleighBel
C 5	952	Pc BellTree
C#5	1450	Dr SdAnSmRim
D 5	1440	Dr SdT9-5
D#5	1472	Dr SdHipRm3
E 5	1377	Dr SdClRmL
F 5	839	Se ScratchLoF
F#5	840	Se ScratchLoR
G 5	841	Se ScratchBdF
G#5	842	Se ScratchBdR
A 5	843	Se ScratchSdF
A#5	844	Se ScratchSdR
B 5	845	Se ScratchVoF
C 6	1062	Dr BdT8-2

PRE 18 T9HipKit1

Нота	№ сигнала	Наименование сигнала
C 0	969	Pc ClaveT8
C#0	1440	Dr SdT9-5
D 0	821	Se TurnTable
D#0	761	Me Quiek
E 0	855	Se ScratchCb3
F 0	1388	Dr SdLvRolL
F#0	971	Pc AnaClick
G 0	1441	Dr SdT9Gate
G#0	1497	Dr SdRimSE
A 0	1056	Dr BdT9-3
A#0	1438	Dr SdT9-3
B 0	1055	Dr BdT9-2
C 1	1054	Dr BdT9-1
C#1	1442	Dr SdT9Rim
D 1	1440	Dr SdT9-5
D#1	953	Pc ClapT9
E 1	1439	Dr SdT9-4
F 1	1659	Dr TomT9Lo
F#1	1597	Dr HHClT9
G 1	1659	Dr TomT9Lo
G#1	1598	Dr HHOpT9
A 1	1659	Dr TomT9Lo
A#1	1598	Dr HHOpT9
B 1	1659	Dr TomT9Lo
C 2	1658	Dr TomT9Hi
C#2	1710	Dr CrashT9
D 2	1658	Dr TomT9Hi
D#2	1713	Dr RideT9
E 2	1710	Dr CrashT9
F 2	1713	Dr RideT9
F#2	963	Pc TambrnRX5
G 2	1710	Dr CrashT9
G#2	960	Pc CowBelAnCR
A 2	1710	Dr CrashT9
A#2	935	Pc Vibraslap
B 2	1713	Dr RideT9
C 3	873	Pc Bongo H1
C#3	872	Pc Bongo L
D 3	859	Pc CongaTip
D#3	857	Pc Conga Opn
E 3	866	Pc TumbaOpen
F 3	875	Pc TmbaleH1-3
F#3	879	Pc TmbaleL1-3
G 3	922	Pc AgogoHi
G#3	923	Pc AgogoLo
A 3	893	Pc Cabasa1-2
A#3	891	Pc MaracasSlr
B 3	936	Pc Whistle
C 4	936	Pc Whistle
C#4	926	Pc GuiroShort
D 4	925	Pc GuiroLong
D#4	933	Pc Clave
E 4	934	Pc WoodBlock
F 4	934	Pc WoodBlock
F#4	871	Pc CuicaHi
G 4	870	Pc CuicaLo
G#4	939	Pc TriangleMt
A 4	938	Pc TriangleOp
A#4	899	Pc Shaker 1
B 4	951	Pc SleighBel
C 5	952	Pc BellTree
C#5	1442	Dr SdT9Rim
D 5	1441	Dr SdT9Gate
D#5	940	Pc HandClapSt
E 5	1440	Dr SdT9-5
F 5	834	Se Scratch H
F#5	835	Se Scratch L
G 5	836	Se ScratchDwn
G#5	837	Se ScratchHiF
A 5	838	Se ScratchHiR
A#5	839	Se ScratchLoF
B 5	840	Se ScratchLoR
C 6	1058	Dr BdT9Hd1

PRE 19 T9HipKit2

Нота	№ сигнала	Наименование сигнала
C 0	969	Pc ClaveT8
C#0	1440	Dr SdT9-5
D 0	821	Se TurnTable
D#0	761	Me Quiek
E 0	855	Se ScratchCb3
F 0	1388	Dr SdLvRolL
F#0	971	Pc AnaClick
G 0	1441	Dr SdT9Gate
G#0	1452	Dr SdAnCRRim
A 0	1060	Dr BdT9Hd3
A#0	1437	Dr SdT9-2
B 0	1059	Dr BdT9Hd2
C 1	1058	Dr BdT9Hd1
C#1	1442	Dr SdT9Rim
D 1	1436	Dr SdT9-1
D#1	953	Pc ClapT9
E 1	1440	Dr SdT9-5
F 1	1659	Dr TomT9Lo
F#1	1597	Dr HHClT9
G 1	1659	Dr TomT9Lo
G#1	1598	Dr HHOpT9
A 1	1659	Dr TomT9Lo
A#1	1598	Dr HHOpT9
B 1	1659	Dr TomT9Lo
C 2	1658	Dr TomT9Hi
C#2	1710	Dr CrashT9
D 2	1658	Dr TomT9Hi
D#2	1713	Dr RideT9
E 2	1710	Dr CrashT9
F 2	1713	Dr RideT9
F#2	963	Pc TambrnRX5
G 2	1710	Dr CrashT9
G#2	960	Pc CowBelAnCR
A 2	1710	Dr CrashT9
A#2	935	Pc Vibraslap
B 2	1713	Dr RideT9
C 3	873	Pc Bongo H1
C#3	872	Pc Bongo L
D 3	859	Pc CongaTip
D#3	857	Pc Conga Opn
E 3	866	Pc TumbaOpen
F 3	875	Pc TmbaleH1-3
F#3	879	Pc TmbaleL1-3
G 3	922	Pc AgogoHi
G#3	923	Pc AgogoLo
A 3	893	Pc Cabasa1-2
A#3	891	Pc MaracasSlr
B 3	936	Pc Whistle
C 4	936	Pc Whistle
C#4	926	Pc GuiroShort
D 4	925	Pc GuiroLong
D#4	933	Pc Clave
E 4	934	Pc WoodBlock
F 4	934	Pc WoodBlock
F#4	871	Pc CuicaHi
G 4	870	Pc CuicaLo
G#4	939	Pc TriangleMt
A 4	938	Pc TriangleOp
A#4	899	Pc Shaker 1
B 4	951	Pc SleighBel
C 5	952	Pc BellTree
C#5	1442	Dr SdT9Rim
D 5	1440	Dr SdT9-5
D#5	953	Pc ClapT9
E 5	1439	Dr SdT9-4
F 5	834	Se Scratch H
F#5	835	Se Scratch L
G 5	836	Se ScratchDwn
G#5	837	Se ScratchHiF
A 5	838	Se ScratchHiR
A#5	839	Se ScratchLoF
B 5	840	Se ScratchLoR
C 6	1054	Dr BdT9-1

PRE 20 R&B Kit1

Нота	№ сигнала	Наименование сигнала
C 0	1060	Dr BdT9Hd3
C#0	1451	Dr SdAnCR
D 0	1450	Dr SdAnSmRim
D#0	1484	Dr SdClpAna
E 0	1441	Dr SdT9Gate
F 0	1390	Dr SdRollMono
F#0	1493	Dr SdTimbr
G 0	1490	Dr SdFMRim
G#0	1458	Dr SdJnglFx
A 0	1041	Dr BdVar1
A#0	1470	Dr SdHipRm1
B 0	1062	Dr BdT8-2
C 1	1092	Dr BdZapMid
C#1	1448	Dr SdT8Rim
D 1	1471	Dr SdHipRm2
D#1	940	Pc HandClapSt
E 1	1451	Dr SdAnCR
F 1	1063	Dr BdT8-3
F#1	1601	Dr HHClT8-2
G 1	1063	Dr BdT8-3
G#1	1604	Dr HHClAnCR
A 1	1063	Dr BdT8-3
A#1	1602	Dr HHOpT8-2
B 1	1063	Dr BdT8-3
C 2	1063	Dr BdT8-3
C#2	1674	Dr Crash
D 2	1063	Dr BdT8-3
D#2	1713	Dr RideT9
E 2	1705	Dr China
F 2	1699	Dr CupMono
F#2	913	Pc TambrnHit
G 2	1674	Dr Crash
G#2	945	Pc Cowbell1
A 2	1710	Dr CrashT9
A#2	958	Pc CowBelT8
B 2	1682	Dr RideCym St
C 3	873	Pc Bongo H1
C#3	872	Pc Bongo L
D 3	859	Pc CongaTip
D#3	858	Pc CongaOpSlp
E 3	857	Pc Conga Opn
F 3	813	Se HiQ1
F#3	813	Se HiQ1
G 3	923	Pc AgogoLo
G#3	923	Pc AgogoLo
A 3	962	Pc AnaShaker
A#3	891	Pc MaracasSlr
B 3	776	Me VoxDrum
C 4	776	Me VoxDrum
C#4	813	Se HiQ1
D 4	814	Se HiQ2
D#4	969	Pc ClaveT8
E 4	813	Se HiQ1
F 4	848	Se ScratchSpn
F#4	838	Se ScratchHiR
G 4	837	Se ScratchHiF
G#4	939	Pc TriangleMt
A 4	938	Pc TriangleOp
A#4	900	Pc Shaker 2
B 4	913	Pc TambrnHit
C 5	952	Pc BellTree
C#5	1479	Dr SdBreakRol
D 5	795	Se NzBurst
D#5	731	Me VoxBell
E 5	1463	Dr SdR&B1
F 5	741	Me VoxAlk
F#5	519	Pc Udo Hi
G 5	736	Me TranCho
G#5	750	Me Swarm
A 5	1040	Dr BdPop
A#5	1464	Dr SdR&B1Rm
B 5	1076	Dr BdR&B2
C 6	1674	Dr Crash

PRE 21 R&B Kit2

Нота	№ сигнала	Наименование сигнала
C 0	1043	Dr BdRoom1
C#0	971	Pc AnaClick
D 0	494	Pc Wataiko
D#0	1369	Dr SdHpStk4
E 0	862	Pc Quint1Opn
F 0	506	Pc SmlTablTak
F#0	1442	Dr SdT9Rim
G 0	1194	Dr SdNmSt1-4
G#0	1464	Dr SdR&B1Rm
A 0	999	Dr BdNmSt1-2
A#0	1228	Dr SdFk3R
B 0	1063	Dr BdT8-3
C 1	1075	Dr BdR&B1
C#1	1380	Dr SdClRim3
D 1	1348	Dr SdPcRim
D#1	940	Pc HandClapSt
E 1	1464	Dr SdR&B1Rm
F 1	1063	Dr BdT8-3
F#1	1601	Dr HHClT8-2
G 1	1063	Dr BdT8-3
G#1	1599	Dr HHClT8-1
A 1	1063	Dr BdT8-3
A#1	1602	Dr HHOpT8-2
B 1	1063	Dr BdT8-3
C 2	1660	Dr TomT8
C#2	1670	Dr CrashSt
D 2	1660	Dr TomT8
D#2	1682	Dr RideCym St
E 2	1701	Dr ChinaSt
F 2	1690	Dr RideCup St
F#2	912	Pc TambrnSw
G 2	1674	Dr Crash
G#2	945	Pc Cowbell1
A 2	1710	Dr CrashT9
A#2	958	Pc CowBelT8
B 2	1682	Dr RideCym St
C 3	873	Pc Bongo H1
C#3	872	Pc Bongo L
D 3	859	Pc CongaTip
D#3	858	Pc CongaOpSlp
E 3	857	Pc Conga Opn
F 3	813	Se HiQ1
F#3	813	Se HiQ1
G 3	923	Pc AgogoLo
G#3	962	Pc AnaShaker
A 3	962	Pc AnaShaker
A#3	891	Pc MaracasSlr
B 3	776	Me VoxDrum
C 4	776	Me VoxDrum
C#4	813	Se HiQ1
D 4	814	Se HiQ2
D#4	969	Pc ClaveT8
E 4	813	Se HiQ1
F 4	848	Se ScratchSpn
F#4	838	Se ScratchHiR
G 4	837	Se ScratchHiF
G#4	939	Pc TriangleMt
A 4	938	Pc TriangleOp
A#4	900	Pc Shaker 2
B 4	913	Pc TambrnHit
C 5	952	Pc BellTree
C#5	1496	Dr SdLofi
D 5	1363	Dr SdRkStk2St
D#5	1347	Dr SdPicol
E 5	1465	Dr SdR&B2
F 5	1076	Dr BdR&B2
F#5	1489	Dr SdFM
G 5	1077	Dr BdHipDp
G#5	1495	Dr SdHammr
A 5	1100	Dr BdSlimy
A#5	740	Me HH Hit
B 5	1063	Dr BdT8-3
C 6	821	Se TurnTable

PRE 22 R&B Kit3

Нота	№ сигнала	Наименование сигнала
C 0	265	Gt PlayFx Mix
C#0	1835	Se Ab FX08
D 0	1833	Se Ab FX06
D#0	1718	Se Ag FX02 St
E 0	1848	Se Eb FX 12
F 0	1852	Se Eb FX 16
F#0	1513	Dr HHCls1-4RL
G 0	999	Dr BdNmSt1-2
G#0	1521	Dr HHPdl3 St
A 0	1194	Dr SdNmSt1-4
A#0	1536	Dr HHOpn2 St
B 0	1063	Dr BdT8-3
C 1	1075	Dr BdR&B1
C#1	1380	Dr SdClRim3
D 1	1348	Dr SdPcRim
D#1	940	Pc HandClapSt
E 1	1464	Dr SdR&B1Rm
F 1	1063	Dr BdT8-3
F#1	1601	Dr HHClT8-2
G 1	1063	Dr BdT8-3
G#1	1599	Dr HHClT8-1
A 1	1063	Dr BdT8-3
A#1	1602	Dr HHOpT8-2
B 1	1063	Dr BdT8-3
C 2	1660	Dr TomT8
C#2	1670	Dr CrashSt
D 2	1660	Dr TomT8
D#2	1682	Dr RideCym St
E 2	1701	Dr ChinaSt
F 2	1690	Dr RideCup St
F#2	912	Pc TambrnSw
G 2	1674	Dr Crash
G#2	962	Pc AnaShaker
A 2	962	Pc AnaShaker
A#2	967	Pc MarcsT8
B 2	967	Pc MarcsT8
C 3	887	Pc GanzaAc
C#3	888	Pc GanzaBk
D 3	889	Pc GanzaFw
D#3	890	Pc Maracas1-2
E 3	891	Pc MaracasSlr
F 3	893	Pc Cabasa1-2
F#3	894	Pc Cabasa1
G 3	895	Pc Cabasa2
G#3	896	Pc Caxixi1-2
A 3	962	Pc AnaShaker
A#3	898	Pc Caxixi2
B 3	899	Pc Shaker 1
C 4	899	Pc Shaker 1
C#4	902	Pc ShakerHip1
D 4	905	Pc ShakerHip4
D#4	969	Pc ClaveT8
E 4	863	Pc Quint1Slp
F 4	848	Se ScratchSpn
F#4	838	Se ScratchHiR
G 4	837	Se ScratchHiF
G#4	939	Pc TriangleMt
A 4	938	Pc TriangleOp
A#4	917	Pc PandierTip
B 4	913	Pc TambrnHit
C 5	1095	Dr BdHardLong
C#5	1496	Dr SdLofi
D 5	1363	Dr SdRkStk2St
D#5	1347	Dr SdPicol
E 5	821	Se TurnTable
F 5	1465	Dr SdR&B2
F#5	1546	Dr HHClFtSt
G 5	1077	Dr BdHipDp
G#5	1550	Dr HHHlf2St
A 5	1100	Dr BdSlimy
A#5	1554	Dr HHOp2St
B 5	736	Me TranCho
C 6	1063	Dr BdT8-3

PRE 23 AnalogT9

Нота	№ сигнала	Наименование сигнала
C 0	1055	Dr BdT9-2
C#0	1451	Dr SdAnCR
D 0	1440	Dr SdT9-5
D#0	954	Pc ClapAnSm
E 0	1441	Dr SdT9Gate
F 0	1381	Dr SdRkRolSt
F#0	1438	Dr SdT9-3
G 0	1439	Dr SdT9-4
G#0	1441	Dr SdT9Gate
A 0	1057	Dr BdT9-4
A#0	1440	Dr SdT9-5
B 0	1054	Dr BdT9-1
C 1	1056	Dr BdT9-3
C#1	1442	Dr SdT9Rim
D 1	1436	Dr SdT9-1
D#1	953	Pc ClapT9
E 1	1437	Dr SdT9-2
F 1	1659	Dr TomT9Lo
F#1	1597	Dr HHClT9
G 1	1659	Dr TomT9Lo
G#1	1598	Dr HHOpT9
A 1	1659	Dr TomT9Lo
A#1	1598	Dr HHOpT9
B 1	1658	Dr TomT9Hi
C 2	1658	Dr TomT9Hi
C#2	1710	Dr CrashT9
D 2	1658	Dr TomT9Hi
D#2	1713	Dr RideT9
E 2	1705	Dr China
F 2	1699	Dr CupMono
F#2	963	Pc TambrnRX5
G 2	1674	Dr Crash
G#2	945	Pc Cowbell1
A 2	1675	Dr Crash2
A#2	958	Pc CowBelT8
B 2	1688	Dr RideR
C 3	957	Pc CongaT8
C#3	957	Pc CongaT8
D 3	859	Pc CongaTip
D#3	858	Pc CongaOpSlp
E 3	857	Pc Conga Opn
F 3	875	Pc TmbaleH1-3
F#3	879	Pc TmbaleL1-3
G 3	971	Pc AnaClick
G#3	957	Pc CongaT8
A 3	893	Pc Cabasa1-2
A#3	891	Pc MaracasSlr
B 3	818	Se FxGun2
C 4	819	Se FxGun1
C#4	834	Se Scratch H
D 4	836	Se ScratchDwn
D#4	813	Se HiQ1
E 4	813	Se HiQ1
F 4	814	Se HiQ2
F#4	835	Se Scratch L
G 4	835	Se Scratch L
G#4	939	Pc TriangleMt
A 4	938	Pc TriangleOp
A#4	962	Pc AnaShaker
B 4	951	Pc SleighBel
C 5	952	Pc BellTree
C#5	1347	Dr SdPicol
D 5	1447	Dr SdT8-5
D#5	1384	Dr SdRkRolDSt
E 5	1394	Dr SdBrMt2St
F 5	1069	Dr BdBlpHd
F#5	1455	Dr SdJngl1
G 5	1093	Dr BdSus
G#5	1459	Dr SdD&B1
A 5	1080	Dr BdBreak2
A#5	1485	Dr SdDist
B 5	1094	Dr BdTekPower
C 6	1088	Dr BdDistRM

PRE 24 AnalogT8

Нота	№ сигнала	Наименование сигнала
C 0	1061	Dr BdT8-1
C#0	1451	Dr SdAnCR
D 0	1446	Dr SdT8-4
D#0	1484	Dr SdClpAna
E 0	1445	Dr SdT8-3
F 0	1660	Dr TomT8
F#0	1447	Dr SdT8-5
G 0	1063	Dr BdT8-3
G#0	1446	Dr SdT8-4
A 0	1062	Dr BdT8-2
A#0	1445	Dr SdT8-3
B 0	617	Wv T8KickBass
C 1	1061	Dr BdT8-1
C#1	1448	Dr SdT8Rim
D 1	1444	Dr SdT8-2
D#1	953	Pc ClapT9
E 1	1443	Dr SdT8-1
F 1	1660	Dr TomT8
F#1	1601	Dr HHClT8-2
G 1	1660	Dr TomT8
G#1	1600	Dr HHOpT8-1
A 1	1660	Dr TomT8
A#1	1600	Dr HHOpT8-1
B 1	1660	Dr TomT8
C 2	1660	Dr TomT8
C#2	1711	Dr CrashT8
D 2	1660	Dr TomT8
D#2	1713	Dr RideT9
E 2	1705	Dr China
F 2	1699	Dr CupMono
F#2	963	Pc TambrnRX5
G 2	1708	Dr SplashR
G#2	958	Pc CowBelT8
A 2	1675	Dr Crash2
A#2	935	Pc Vibraslap
B 2	1688	Dr RideR
C 3	957	Pc CongaT8
C#3	957	Pc CongaT8
D 3	957	Pc CongaT8
D#3	957	Pc CongaT8
E 3	957	Pc CongaT8
F 3	876	Pc TimbaleHi1
F#3	880	Pc TimbaleLo1
G 3	791	Se Glass
G#3	791	Se Glass
A 3	893	Pc Cabasa1-2
A#3	967	Pc MarcsT8
B 3	818	Se FxGun2
C 4	819	Se FxGun1
C#4	962	Pc AnaShaker
D 4	962	Pc AnaShaker
D#4	969	Pc ClaveT8
E 4	813	Se HiQ1
F 4	814	Se HiQ2
F#4	835	Se Scratch L
G 4	835	Se Scratch L
G#4	939	Pc TriangleMt
A 4	938	Pc TriangleOp
A#4	962	Pc AnaShaker
B 4	951	Pc SleighBel
C 5	952	Pc BellTree
C#5	1466	Dr SdHip1
D 5	1467	Dr SdHip2
D#5	1469	Dr SdHipGate
E 5	1475	Dr SdBreak1
F 5	1068	Dr BdBlip
F#5	1480	Dr SdFx1
G 5	1090	Dr BdFxHmr
G#5	1495	Dr SdHammr
A 5	1091	Dr BdZapHrd
A#5	1488	Dr SdDodgL
B 5	1094	Dr BdTekPower
C 6	1100	Dr BdSlimy

PRE 25 Tekno Kit

Нота	№ сигнала	Наименование сигнала
C 0	1100	Dr BdSlimy
C#0	1442	Dr SdT9Rim
D 0	1447	Dr SdT8-5
D#0	953	Pc ClapT9
E 0	1438	Dr SdT9-3
F 0	1453	Dr SdHuman1
F#0	1468	Dr SdHip3
G 0	1439	Dr SdT9-4
G#0	1467	Dr SdHip2
A 0	1099	Dr BdThkSkn
A#0	1437	Dr SdT9-2
B 0	1086	Dr BdDist4
C 1	1092	Dr BdZapMid
C#1	1448	Dr SdT8Rim
D 1	1447	Dr SdT8-5
D#1	953	Pc ClapT9
E 1	1491	Dr SdSyn
F 1	1660	Dr TomT8
F#1	1617	Dr HHClLoFi
G 1	1660	Dr TomT8
G#1	1618	Dr HHOpLoFi
A 1	1660	Dr TomT8
A#1	1618	Dr HHOpLoFi
B 1	1660	Dr TomT8
C 2	1660	Dr TomT8
C#2	1711	Dr CrashT8
D 2	1660	Dr TomT8
D#2	1713	Dr RideT9
E 2	1674	Dr Crash
F 2	1699	Dr CupMono
F#2	964	Pc TambrnAnCR
G 2	1671	Dr CrashL
G#2	958	Pc CowBelT8
A 2	1710	Dr CrashT9
A#2	958	Pc CowBelT8
B 2	1712	Dr CrashSyn
C 3	957	Pc CongaT8
C#3	957	Pc CongaT8
D 3	957	Pc CongaT8
D#3	957	Pc CongaT8
E 3	957	Pc CongaT8
F 3	875	Pc TmbaleH1-3
F#3	879	Pc TmbaleL1-3
G 3	791	Se Glass
G#3	791	Se Glass
A 3	894	Pc Cabasa1
A#3	967	Pc MarcsT8
B 3	818	Se FxGun2
C 4	819	Se FxGun1
C#4	834	Se Scratch H
D 4	836	Se ScratchDwn
D#4	813	Se HiQ1
E 4	813	Se HiQ1
F 4	814	Se HiQ2
F#4	835	Se Scratch L
G 4	835	Se Scratch L
G#4	939	Pc TriangleMt
A 4	938	Pc TriangleOp
A#4	962	Pc AnaShaker
B 4	951	Pc SleighBel
C 5	1104	Dr BdElec4
C#5	1107	Dr BdElComp3
D 5	1109	Dr BdElFX2
D#5	1111	Dr BdElClick
E 5	1112	Dr BdElPwr1
F 5	1113	Dr BdElPwr2
F#5	1103	Dr BdElec3
G 5	1101	Dr BdElec1
G#5	1429	Dr SdElec6
A 5	1430	Dr SdElec7
A#5	1431	Dr SdElec8
B 5	1432	Dr SdElec9
C 6	1435	Dr SdElec12

PRE 26 House Kit1

Нота	№ сигнала	Наименование сигнала
C 0	1057	Dr BdT9-4
C#0	1448	Dr SdT8Rim
D 0	1447	Dr SdT8-5
D#0	940	Pc HandClapSt
E 0	1488	Dr SdDodgL
F 0	1387	Dr SdLvRolSt
F#0	1438	Dr SdT9-3
G 0	1443	Dr SdT8-1
G#0	1440	Dr SdT9-5
A 0	1054	Dr BdT9-1
A#0	1441	Dr SdT9Gate
B 0	1055	Dr BdT9-2
C 1	1056	Dr BdT9-3
C#1	1442	Dr SdT9Rim
D 1	1436	Dr SdT9-1
D#1	953	Pc ClapT9
E 1	1437	Dr SdT9-2
F 1	1659	Dr TomT9Lo
F#1	1599	Dr HHClT8-1
G 1	1659	Dr TomT9Lo
G#1	1598	Dr HHOpT9
A 1	1659	Dr TomT9Lo
A#1	1598	Dr HHOpT9
B 1	1658	Dr TomT9Hi
C 2	1658	Dr TomT9Hi
C#2	1710	Dr CrashT9
D 2	1658	Dr TomT9Hi
D#2	1713	Dr RideT9
E 2	1674	Dr Crash
F 2	1699	Dr CupMono
F#2	913	Pc TambrnHit
G 2	1674	Dr Crash
G#2	945	Pc Cowbell1
A 2	1670	Dr CrashSt
A#2	958	Pc CowBelT8
B 2	1682	Dr RideCym St
C 3	873	Pc Bongo H1
C#3	872	Pc Bongo L
D 3	859	Pc CongaTip
D#3	858	Pc CongaOpSlp
E 3	857	Pc Conga Opn
F 3	876	Pc TimbaleHi1
F#3	876	Pc TimbaleHi1
G 3	923	Pc AgogoLo
G#3	923	Pc AgogoLo
A 3	894	Pc Cabasa1
A#3	891	Pc MaracasSlr
B 3	776	Me VoxDrum
C 4	776	Me VoxDrum
C#4	926	Pc GuiroShort
D 4	925	Pc GuiroLong
D#4	933	Pc Clave
E 4	934	Pc WoodBlock
F 4	934	Pc WoodBlock
F#4	871	Pc CuicaHi
G 4	870	Pc CuicaLo
G#4	939	Pc TriangleMt
A 4	938	Pc TriangleOp
A#4	962	Pc AnaShaker
B 4	951	Pc SleighBel
C 5	952	Pc BellTree
C#5	1479	Dr SdBreakRol
D 5	795	Se NzBurst
D#5	731	Me VoxBell
E 5	1463	Dr SdR&B1
F 5	741	Me VoxAlk
F#5	519	Pc Udo Hi
G 5	736	Me TranCho
G#5	750	Me Swarm
A 5	1040	Dr BdPop
A#5	1464	Dr SdR&B1Rm
B 5	1076	Dr BdR&B2
C 6	1674	Dr Crash

PRE 27 House Kit2

Нота	№ сигнала	Наименование сигнала
C 0	1055	Dr BdT9-2
C#0	1448	Dr SdT8Rim
D 0	523	Pc Dohol H
D#0	953	Pc ClapT9
E 0	1437	Dr SdT9-2
F 0	1441	Dr SdT9Gate
F#0	1454	Dr SdHuman2
G 0	1480	Dr SdFx1
G#0	1496	Dr SdLofi
A 0	1059	Dr BdT9Hd2
A#0	1442	Dr SdT9Rim
B 0	1056	Dr BdT9-3
C 1	1058	Dr BdT9Hd1
C#1	1442	Dr SdT9Rim
D 1	1437	Dr SdT9-2
D#1	795	Se NzBurst
E 1	1164	Dr SdPwrL1-4
F 1	1491	Dr SdSyn
F#1	1597	Dr HHClT9
G 1	1491	Dr SdSyn
G#1	1598	Dr HHOpT9
A 1	1491	Dr SdSyn
A#1	1598	Dr HHOpT9
B 1	1491	Dr SdSyn
C 2	1491	Dr SdSyn
C#2	1710	Dr CrashT9
D 2	1491	Dr SdSyn
D#2	1713	Dr RideT9
E 2	1712	Dr CrashSyn
F 2	1699	Dr CupMono
F#2	913	Pc TambrnHit
G 2	1711	Dr CrashT8
G#2	945	Pc Cowbell1
A 2	1674	Dr Crash
A#2	958	Pc CowBelT8
B 2	1682	Dr RideCym St
C 3	873	Pc Bongo H1
C#3	872	Pc Bongo L
D 3	860	Pc CongaBtm
D#3	858	Pc CongaOpSlp
E 3	857	Pc Conga Opn
F 3	1661	Dr TomSyn1
F#3	1661	Dr TomSyn1
G 3	971	Pc AnaClick
G#3	1497	Dr SdRimSE
A 3	894	Pc Cabasa1
A#3	891	Pc MaracasSlr
B 3	776	Me VoxDrum
C 4	776	Me VoxDrum
C#4	964	Pc TambrnAnCR
D 4	962	Pc AnaShaker
D#4	969	Pc ClaveT8
E 4	963	Pc TambrnRX5
F 4	959	Pc CowBelRX11
F#4	962	Pc AnaShaker
G 4	837	Se ScratchHiF
G#4	939	Pc TriangleMt
A 4	938	Pc TriangleOp
A#4	962	Pc AnaShaker
B 4	951	Pc SleighBel
C 5	952	Pc BellTree
C#5	499	Pc TablaBya
D 5	500	Pc TablaNah
D#5	501	Pc TablaMut
E 5	731	Me VoxBell
F 5	1040	Dr BdPop
F#5	519	Pc Udo Hi
G 5	1053	Dr BdFXGate
G#5	795	Se NzBurst
A 5	1054	Dr BdT9-1
A#5	1479	Dr SdBreakRol
B 5	1674	Dr Crash
C 6	821	Se TurnTable

PRE 28 Big Kit

Нота	№ сигнала	Наименование сигнала
C 0	1053	Dr BdFXGate
C#0	872	Pc Bongo L
D 0	1359	Dr SdGM
D#0	940	Pc HandClapSt
E 0	1354	Dr SdGate2
F 0	1381	Dr SdRkRolSt
F#0	1332	Dr SdRkRim1St
G 0	1347	Dr SdPicol
G#0	1344	Dr SdRkFlmSt
A 0	1044	Dr BdRoom2
A#0	1360	Dr SdRkStk1St
B 0	1045	Dr BdRoom3
C 1	1052	Dr BdGate
C#1	1351	Dr SdMdRim
D 1	1353	Dr SdGate1
D#1	954	Pc ClapAnSm
E 1	1352	Dr SdAmb
F 1	1657	Dr TomAmbLo
F#1	1608	Dr HHClD&B
G 1	1657	Dr TomAmbLo
G#1	1609	Dr HHPdlD&B
A 1	1657	Dr TomAmbLo
A#1	1610	Dr HHOpD&B
B 1	1656	Dr TomAmbHi
C 2	1656	Dr TomAmbHi
C#2	1670	Dr CrashSt
D 2	1656	Dr TomAmbHi
D#2	1682	Dr RideCym St
E 2	1701	Dr ChinaSt
F 2	1699	Dr CupMono
F#2	913	Pc TambrnHit
G 2	1674	Dr Crash
G#2	945	Pc Cowbell1
A 2	1670	Dr CrashSt
A#2	935	Pc Vibraslap
B 2	1682	Dr RideCym St
C 3	873	Pc Bongo H1
C#3	872	Pc Bongo L
D 3	859	Pc CongaTip
D#3	858	Pc CongaOpSlp
E 3	857	Pc Conga Opn
F 3	1089	Dr Bd+HH
F#3	1089	Dr Bd+HH
G 3	923	Pc AgogoLo
G#3	923	Pc AgogoLo
A 3	894	Pc Cabasa1
A#3	891	Pc MaracasSlr
B 3	818	Se FxGun2
C 4	819	Se FxGun1
C#4	834	Se Scratch H
D 4	836	Se ScratchDwn
D#4	933	Pc Clave
E 4	934	Pc WoodBlock
F 4	934	Pc WoodBlock
F#4	835	Se Scratch L
G 4	835	Se Scratch L
G#4	939	Pc TriangleMt
A 4	938	Pc TriangleOp
A#4	900	Pc Shaker 2
B 4	951	Pc SleighBel
C 5	952	Pc BellTree
C#5	1485	Dr SdDist
D 5	1489	Dr SdFM
D#5	1490	Dr SdFMRim
E 5	1492	Dr SdClappy
F 5	1045	Dr BdRoom3
F#5	1493	Dr SdTimbr
G 5	1032	Dr BdRk1St
G#5	1497	Dr SdRimSE
A 5	1035	Dr BdRk2St
A#5	1479	Dr SdBreakRol
B 5	1073	Dr BdD&B1
C 6	1044	Dr BdRoom2

PRE 29 Break Kit

Нота	№ сигнала	Наименование сигнала
C 0	1078	Dr BdBrkDp
C#0	1318	Dr SdHip1St
D 0	1496	Dr SdLofi
D#0	1492	Dr SdClappy
E 0	1355	Dr SdLdwHMono
F 0	1384	Dr SdRkRolDSt
F#0	1353	Dr SdGate1
G 0	1350	Dr SdMid
G#0	1356	Dr SdBrRim
A 0	1081	Dr BdBreakHvy
A#0	1473	Dr SdHipRm4
B 0	1080	Dr BdBreak2
C 1	1079	Dr BdBreak1
C#1	1470	Dr SdHipRm1
D 1	1477	Dr SdBreak3
D#1	1475	Dr SdBreak1
E 1	1476	Dr SdBreak2
F 1	1632	Dr TomLow St
F#1	1567	Dr HHClRkSR
G 1	1632	Dr TomLow St
G#1	1580	Dr HHPdlRkR
A 1	1632	Dr TomLow St
A#1	1592	Dr HHHlfOpRkR
B 1	1624	Dr TomHi St
C 2	1624	Dr TomHi St
C#2	1671	Dr CrashL
D 2	1624	Dr TomHi St
D#2	1687	Dr RideL
E 2	1702	Dr ChinaL
F 2	1699	Dr CupMono
F#2	913	Pc TambrnHit
G 2	1674	Dr Crash
G#2	945	Pc Cowbell1
A 2	1672	Dr CrashR
A#2	959	Pc CowBelRX11
B 2	1698	Dr RideMono
C 3	873	Pc Bongo H1
C#3	872	Pc Bongo L
D 3	859	Pc CongaTip
D#3	858	Pc CongaOpSlp
E 3	857	Pc Conga Opn
F 3	873	Pc Bongo H1
F#3	872	Pc Bongo L
G 3	857	Pc Conga Opn
G#3	923	Pc AgogoLo
A 3	894	Pc Cabasa1
A#3	891	Pc MaracasSlr
B 3	876	Pc TimbaleHi1
C 4	880	Pc TimbaleLo1
C#4	834	Se Scratch H
D 4	836	Se ScratchDwn
D#4	933	Pc Clave
E 4	934	Pc WoodBlock
F 4	934	Pc WoodBlock
F#4	835	Se Scratch L
G 4	835	Se Scratch L
G#4	939	Pc TriangleMt
A 4	938	Pc TriangleOp
A#4	900	Pc Shaker 2
B 4	951	Pc SleighBel
C 5	821	Se TurnTable
C#5	1479	Dr SdBreakRol
D 5	622	Wv FMBass5
D#5	757	Me Mind Bell
E 5	1480	Dr SdFx1
F 5	1035	Dr BdRk2St
F#5	762	Me LfoSeq
G 5	790	Se Ripper
G#5	795	Se NzBurst
A 5	822	Se Police
A#5	755	Me Fairwave
B 5	750	Me Swarm
C 6	753	Me RadioNz

PRE 30 Drum'nBass

Нота	№ сигнала	Наименование сигнала
C 0	1077	Dr BdHipDp
C#0	872	Pc Bongo L
D 0	1465	Dr SdR&B2
D#0	1493	Dr SdTimbr
E 0	1461	Dr SdD&B3
F 0	1495	Dr SdHammr
F#0	791	Se Glass
G 0	1074	Dr BdD&B2
G#0	1521	Dr HHPdl3 St
A 0	1077	Dr BdHipDp
A#0	1554	Dr HHOp2St
B 0	1082	Dr BdBreakHrd
C 1	1073	Dr BdD&B1
C#1	1351	Dr SdMdRim
D 1	1459	Dr SdD&B1
D#1	795	Se NzBurst
E 1	1460	Dr SdD&B2
F 1	1657	Dr TomAmbLo
F#1	1608	Dr HHClD&B
G 1	1657	Dr TomAmbLo
G#1	1609	Dr HHPdlD&B
A 1	1657	Dr TomAmbLo
A#1	1610	Dr HHOpD&B
B 1	1656	Dr TomAmbHi
C 2	1656	Dr TomAmbHi
C#2	1671	Dr CrashL
D 2	1656	Dr TomAmbHi
D#2	1682	Dr RideCym St
E 2	1705	Dr China
F 2	1699	Dr CupMono
F#2	913	Pc TambrnHit
G 2	1674	Dr Crash
G#2	945	Pc Cowbell1
A 2	1670	Dr CrashSt
A#2	935	Pc Vibraslap
B 2	1682	Dr RideCym St
C 3	873	Pc Bongo H1
C#3	872	Pc Bongo L
D 3	859	Pc CongaTip
D#3	858	Pc CongaOpSlp
E 3	857	Pc Conga Opn
F 3	1462	Dr SdD&B4
F#3	1611	Dr HHRvD&B
G 3	923	Pc AgogoLo
G#3	923	Pc AgogoLo
A 3	894	Pc Cabasa1
A#3	891	Pc MaracasSlr
B 3	818	Se FxGun2
C 4	819	Se FxGun1
C#4	926	Pc GuiroShort
D 4	925	Pc GuiroLong
D#4	933	Pc Clave
E 4	805	Se ElPerc8
F 4	799	Se ElPerc2
F#4	650	Wv P50-1
G 4	810	Se ElPerc13
G#4	821	Se TurnTable
A 4	938	Pc TriangleOp
A#4	900	Pc Shaker 2
B 4	951	Pc SleighBel
C 5	952	Pc BellTree
C#5	1485	Dr SdDist
D 5	1489	Dr SdFM
D#5	1490	Dr SdFMRim
E 5	1492	Dr SdClappy
F 5	1073	Dr BdD&B1
F#5	1493	Dr SdTimbr
G 5	1087	Dr BdDist5
G#5	1497	Dr SdRimSE
A 5	1086	Dr BdDist4
A#5	1468	Dr SdHip3
B 5	1100	Dr BdSlimy
C 6	1089	Dr Bd+HH

PRE 31 Acid Kit

Нота	№ сигнала	Наименование сигнала
C 0	1096	Dr BdATite
C#0	1448	Dr SdT8Rim
D 0	1457	Dr SdJngl3
D#0	940	Pc HandClapSt
E 0	1443	Dr SdT8-1
F 0	1661	Dr TomSyn1
F#0	1289	Dr SdBhL1-3
G 0	1296	Dr SdBh3R
G#0	1248	Dr SdSonSt1-3
A 0	1008	Dr BdFkSt1-2
A#0	1232	Dr SdBsSt1-3
B 0	1068	Dr BdBlip
C 1	1057	Dr BdT9-4
C#1	1442	Dr SdT9Rim
D 1	1489	Dr SdFM
D#1	953	Pc ClapT9
E 1	1451	Dr SdAnCR
F 1	1659	Dr TomT9Lo
F#1	1612	Dr HHClTek
G 1	1659	Dr TomT9Lo
G#1	1612	Dr HHClTek
A 1	1659	Dr TomT9Lo
A#1	1613	Dr HHOpTek
B 1	1658	Dr TomT9Hi
C 2	1658	Dr TomT9Hi
C#2	1710	Dr CrashT9
D 2	1658	Dr TomT9Hi
D#2	1713	Dr RideT9
E 2	1674	Dr Crash
F 2	1695	Dr CupL
F#2	913	Pc TambrnHit
G 2	1674	Dr Crash
G#2	945	Pc Cowbell1
A 2	1706	Dr SplashSt
A#2	958	Pc CowBelT8
B 2	1698	Dr RideMono
C 3	873	Pc Bongo H1
C#3	872	Pc Bongo L
D 3	859	Pc CongaTip
D#3	858	Pc CongaOpSlp
E 3	857	Pc Conga Opn
F 3	876	Pc TimbaleHi1
F#3	876	Pc TimbaleHi1
G 3	922	Pc AgogoHi
G#3	923	Pc AgogoLo
A 3	894	Pc Cabasa1
A#3	891	Pc MaracasSlr
B 3	818	Se FxGun2
C 4	819	Se FxGun1
C#4	834	Se Scratch H
D 4	836	Se ScratchDwn
D#4	813	Se HiQ1
E 4	813	Se HiQ1
F 4	814	Se HiQ2
F#4	835	Se Scratch L
G 4	835	Se Scratch L
G#4	939	Pc TriangleMt
A 4	938	Pc TriangleOp
A#4	962	Pc AnaShaker
B 4	951	Pc SleighBel
C 5	952	Pc BellTree
C#5	1440	Dr SdT9-5
D 5	1440	Dr SdT9-5
D#5	1440	Dr SdT9-5
E 5	1440	Dr SdT9-5
F 5	1066	Dr BdHuman1
F#5	1459	Dr SdD&B1
G 5	1830	Se Ab FX03
G#5	681	Wv DigiOsc4
A 5	680	Wv DigiOsc3
A#5	1475	Dr SdBreak1
B 5	1070	Dr BdJngl1
C 6	1081	Dr BdBreakHvy

PRE 32 Jungle Kit

Нота	№ сигнала	Наименование сигнала
C 0	1071	Dr BdJngl2
C#0	1351	Dr SdMdRim
D 0	1457	Dr SdJngl3
D#0	1457	Dr SdJngl3
E 0	1348	Dr SdPcRim
F 0	1390	Dr SdRollMono
F#0	1494	Dr SdWood
G 0	1465	Dr SdR&B2
G#0	1460	Dr SdD&B2
A 0	1071	Dr BdJngl2
A#0	1458	Dr SdJnglFx
B 0	1061	Dr BdT8-1
C 1	1070	Dr BdJngl1
C#1	1473	Dr SdHipRm4
D 1	1456	Dr SdJngl2
D#1	1458	Dr SdJnglFx
E 1	1457	Dr SdJngl3
F 1	1637	Dr TomFlr L
F#1	1565	Dr HHClRkRSw
G 1	1633	Dr TomLow L
G#1	1573	Dr HHPdlRkRSw
A 1	1630	Dr TomMid R
A#1	1588	Dr HHOpRkRSw
B 1	1630	Dr TomMid R
C 2	1626	Dr TomHi R
C#2	1671	Dr CrashL
D 2	1626	Dr TomHi R
D#2	1688	Dr RideR
E 2	1705	Dr China
F 2	1699	Dr CupMono
F#2	913	Pc TambrnHit
G 2	1674	Dr Crash
G#2	945	Pc Cowbell1
A 2	1670	Dr CrashSt
A#2	935	Pc Vibraslap
B 2	1682	Dr RideCym St
C 3	873	Pc Bongo H1
C#3	872	Pc Bongo L
D 3	859	Pc CongaTip
D#3	858	Pc CongaOpSlp
E 3	857	Pc Conga Opn
F 3	500	Pc TablaNah
F#3	499	Pc TablaBya
G 3	923	Pc AgogoLo
G#3	923	Pc AgogoLo
A 3	894	Pc Cabasa1
A#3	891	Pc MaracasSlr
B 3	876	Pc TimbaleHi1
C 4	880	Pc TimbaleLo1
C#4	926	Pc GuiroShort
D 4	925	Pc GuiroLong
D#4	933	Pc Clave
E 4	934	Pc WoodBlock
F 4	934	Pc WoodBlock
F#4	871	Pc CuicaHi
G 4	870	Pc CuicaLo
G#4	939	Pc TriangleMt
A 4	938	Pc TriangleOp
A#4	900	Pc Shaker 2
B 4	951	Pc SleighBel
C 5	952	Pc BellTree
C#5	1611	Dr HHRvD&B
D 5	833	Se RainLoop
D#5	834	Se Scratch H
E 5	835	Se Scratch L
F 5	1069	Dr BdBlpHd
F#5	1491	Dr SdSyn
G 5	794	Se IndusTom
G#5	915	Pc PandieroOp
A 5	790	Se Ripper
A#5	828	Se TelRing
B 5	840	Se ScratchLoR
C 6	817	Se TapeRewnd

PRE 33 Electric

Нота	№ сигнала	Наименование сигнала
C 0	1065	Dr BdAnCR
C#0	1068	Dr BdBlip
D 0	1447	Dr SdT8-5
D#0	954	Pc ClapAnSm
E 0	1471	Dr SdHipRm2
F 0	1390	Dr SdRollMono
F#0	1443	Dr SdT8-1
G 0	1451	Dr SdAnCR
G#0	1444	Dr SdT8-2
A 0	1061	Dr BdT8-1
A#0	1446	Dr SdT8-4
B 0	1068	Dr BdBlip
C 1	1062	Dr BdT8-2
C#1	1448	Dr SdT8Rim
D 1	1445	Dr SdT8-3
D#1	953	Pc ClapT9
E 1	954	Pc ClapAnSm
F 1	1662	Dr TomSyn2
F#1	1601	Dr HHClT8-2
G 1	1662	Dr TomSyn2
G#1	1600	Dr HHOpT8-1
A 1	1662	Dr TomSyn2
A#1	1602	Dr HHOpT8-2
B 1	1662	Dr TomSyn2
C 2	1662	Dr TomSyn2
C#2	1710	Dr CrashT9
D 2	1662	Dr TomSyn2
D#2	1713	Dr RideT9
E 2	1674	Dr Crash
F 2	1712	Dr CrashSyn
F#2	1711	Dr CrashT8
G 2	1674	Dr Crash
G#2	1497	Dr SdRimSE
A 2	1670	Dr CrashSt
A#2	958	Pc CowBelT8
B 2	1712	Dr CrashSyn
C 3	1660	Dr TomT8
C#3	1660	Dr TomT8
D 3	1660	Dr TomT8
D#3	1660	Dr TomT8
E 3	1660	Dr TomT8
F 3	832	Se Applause
F#3	823	Se DoorSqk
G 3	824	Se HeartBeat
G#3	816	Se Bomb
A 3	1618	Dr HHOpLoFi
A#3	899	Pc Shaker 1
B 3	797	Se Zap2
C 4	796	Se Zap1
C#4	834	Se Scratch H
D 4	835	Se Scratch L
D#4	813	Se HiQ1
E 4	813	Se HiQ1
F 4	814	Se HiQ2
F#4	835	Se Scratch L
G 4	775	Me HitOrch2
G#4	1621	Dr HHClFx
A 4	1622	Dr HHOpFx
A#4	962	Pc AnaShaker
B 4	962	Pc AnaShaker
C 5	821	Se TurnTable
C#5	1479	Dr SdBreakRol
D 5	622	Wv FMBass5
D#5	757	Me Mind Bell
E 5	1476	Dr SdBreak2
F 5	1035	Dr BdRk2St
F#5	753	Me RadioNz
G 5	790	Se Ripper
G#5	795	Se NzBurst
A 5	848	Se ScratchSpn
A#5	743	Me BellChoir
B 5	745	Me HiLo
C 6	753	Me RadioNz

PRE 34 Human Kit

Нота	№ сигнала	Наименование сигнала
C 0	1066	Dr BdHuman1
C#0	845	Se ScratchVoF
D 0	774	Me Hit Uhh
D#0	846	Se ScratchVoR
E 0	1458	Dr SdJnglFx
F 0	1381	Dr SdRkRolSt
F#0	1475	Dr SdBreak1
G 0	1451	Dr SdAnCR
G#0	1436	Dr SdT9-1
A 0	1093	Dr BdSus
A#0	1366	Dr SdHpStk1
B 0	1067	Dr BdHuman2
C 1	1067	Dr BdHuman2
C#1	1494	Dr SdWood
D 1	1453	Dr SdHuman1
D#1	1487	Dr SdDodgH
E 1	1454	Dr SdHuman2
F 1	1066	Dr BdHuman1
F#1	1623	Dr HHOpHuman
G 1	1066	Dr BdHuman1
G#1	1623	Dr HHOpHuman
A 1	1066	Dr BdHuman1
A#1	1623	Dr HHOpHuman
B 1	1066	Dr BdHuman1
C 2	1066	Dr BdHuman1
C#2	795	Se NzBurst
D 2	1066	Dr BdHuman1
D#2	1711	Dr CrashT8
E 2	1705	Dr China
F 2	1699	Dr CupMono
F#2	844	Se ScratchSdR
G 2	1706	Dr SplashSt
G#2	776	Me VoxDrum
A 2	1675	Dr Crash2
A#2	966	Pc ElTambrn2
B 2	773	Me StabAah
C 3	873	Pc Bongo H1
C#3	872	Pc Bongo L
D 3	859	Pc CongaTip
D#3	858	Pc CongaOpSlp
E 3	857	Pc Conga Opn
F 3	875	Pc TmbaleH1-3
F#3	879	Pc TmbaleL1-3
G 3	923	Pc AgogoLo
G#3	923	Pc AgogoLo
A 3	894	Pc Cabasa1
A#3	891	Pc MaracasSlr
B 3	818	Se FxGun2
C 4	816	Se Bomb
C#4	834	Se Scratch H
D 4	836	Se ScratchDwn
D#4	839	Se ScratchLoF
E 4	840	Se ScratchLoR
F 4	814	Se HiQ2
F#4	835	Se Scratch L
G 4	835	Se Scratch L
G#4	939	Pc TriangleMt
A 4	938	Pc TriangleOp
A#4	900	Pc Shaker 2
B 4	951	Pc SleighBel
C 5	821	Se TurnTable
C#5	1334	Dr SdRkRim1R
D 5	825	Se Helicopter
D#5	771	Me StabHard
E 5	1353	Dr SdGate1
F 5	1032	Dr BdRk1St
F#5	836	Se ScratchDwn
G 5	1064	Dr BdAnSm
G#5	765	Me Sonar1
A 5	494	Pc Wataiko
A#5	494	Pc Wataiko
B 5	740	Me HH Hit
C 6	772	Me StabOrgan2

PRE 35 Hard Kit

Нота	№ сигнала	Наименование сигнала
C 0	1085	Dr BdDist3
C#0	1494	Dr SdWood
D 0	1353	Dr SdGate1
D#0	940	Pc HandClapSt
E 0	1354	Dr SdGate2
F 0	1390	Dr SdRollMono
F#0	1484	Dr SdClpAna
G 0	1468	Dr SdHip3
G#0	790	Se Ripper
A 0	1088	Dr BdDistRM
A#0	1448	Dr SdT8Rim
B 0	1084	Dr BdDist2
C 1	1083	Dr BdDist1
C#1	1351	Dr SdMdRim
D 1	1485	Dr SdDist
D#1	795	Se NzBurst
E 1	1481	Dr SdFx2
F 1	1665	Dr TomDistLo
F#1	1597	Dr HHClT9
G 1	1665	Dr TomDistLo
G#1	1598	Dr HHOpT9
A 1	1665	Dr TomDistLo
A#1	1598	Dr HHOpT9
B 1	1664	Dr TomDistHi
C 2	1664	Dr TomDistHi
C#2	1710	Dr CrashT9
D 2	1664	Dr TomDistHi
D#2	1713	Dr RideT9
E 2	1705	Dr China
F 2	1699	Dr CupMono
F#2	964	Pc TambrnAnCR
G 2	1674	Dr Crash
G#2	958	Pc CowBelT8
A 2	1670	Dr CrashSt
A#2	935	Pc Vibraslap
B 2	1682	Dr RideCym St
C 3	1493	Dr SdTimbr
C#3	1493	Dr SdTimbr
D 3	859	Pc CongaTip
D#3	858	Pc CongaOpSlp
E 3	857	Pc Conga Opn
F 3	1089	Dr Bd+HH
F#3	1089	Dr Bd+HH
G 3	791	Se Glass
G#3	791	Se Glass
A 3	894	Pc Cabasa1
A#3	891	Pc MaracasSlr
B 3	818	Se FxGun2
C 4	819	Se FxGun1
C#4	834	Se Scratch H
D 4	836	Se ScratchDwn
D#4	813	Se HiQ1
E 4	813	Se HiQ1
F 4	814	Se HiQ2
F#4	835	Se Scratch L
G 4	835	Se Scratch L
G#4	939	Pc TriangleMt
A 4	938	Pc TriangleOp
A#4	962	Pc AnaShaker
B 4	951	Pc SleighBel
C 5	952	Pc BellTree
C#5	1485	Dr SdDist
D 5	1489	Dr SdFM
D#5	1490	Dr SdFMRim
E 5	1492	Dr SdClappy
F 5	1090	Dr BdFxHmr
F#5	794	Se IndusTom
G 5	1073	Dr BdD&B1
G#5	794	Se IndusTom
A 5	1045	Dr BdRoom3
A#5	794	Se IndusTom
B 5	1057	Dr BdT9-4
C 6	1495	Dr SdHammr

PRE 36 Distorted

Нота	№ сигнала	Наименование сигнала
C 0	971	Pc AnaClick
C#0	1391	Dr SdBrMtSt
D 0	1397	Dr SdBrSwrSt
D#0	1394	Dr SdBrMt2St
E 0	1400	Dr SdBSwrAtSt
F 0	1387	Dr SdLvRolSt
F#0	932	Pc Castanet
G 0	1200	Dr SdNm1St
G#0	930	Pc Stick
A 0	1037	Dr BdRk2R
A#0	1303	Dr SdTgt1St
B 0	1079	Dr BdBreak1
C 1	1037	Dr BdRk2R
C#1	1365	Dr SdRkStk2R
D 1	1259	Dr SdSon1L
D#1	941	Pc HandClapL
E 1	1348	Dr SdPcRim
F 1	1657	Dr TomAmbLo
F#1	1576	Dr HHClRk2R
G 1	1657	Dr TomAmbLo
G#1	1580	Dr HHPdlRkR
A 1	1657	Dr TomAmbLo
A#1	1590	Dr HHOpRkR
B 1	1656	Dr TomAmbHi
C 2	1656	Dr TomAmbHi
C#2	1671	Dr CrashL
D 2	1656	Dr TomAmbHi
D#2	1688	Dr RideR
E 2	1702	Dr ChinaL
F 2	1696	Dr CupR
F#2	912	Pc TambrnSw
G 2	1708	Dr SplashR
G#2	948	Pc MamboBl2
A 2	1671	Dr CrashL
A#2	935	Pc Vibraslap
B 2	1682	Dr RideCym St
C 3	873	Pc Bongo H1
C#3	872	Pc Bongo L
D 3	859	Pc CongaTip
D#3	858	Pc CongaOpSlp
E 3	857	Pc Conga Opn
F 3	875	Pc TmbaleH1-3
F#3	879	Pc TmbaleL1-3
G 3	922	Pc AgogoHi
G#3	923	Pc AgogoLo
A 3	893	Pc Cabasa1-2
A#3	891	Pc MaracasSlr
B 3	936	Pc Whistle
C 4	936	Pc Whistle
C#4	926	Pc GuiroShort
D 4	925	Pc GuiroLong
D#4	933	Pc Clave
E 4	934	Pc WoodBlock
F 4	934	Pc WoodBlock
F#4	854	Se ScratchCb2
G 4	838	Se ScratchHiR
G#4	939	Pc TriangleMt
A 4	938	Pc TriangleOp
A#4	899	Pc Shaker 1
B 4	951	Pc SleighBel
C 5	952	Pc BellTree
C#5	1347	Dr SdPicol
D 5	1358	Dr SdHeavy
D#5	1484	Dr SdClpAna
E 5	1348	Dr SdPcRim
F 5	1044	Dr BdRoom2
F#5	1350	Dr SdMid
G 5	1045	Dr BdRoom3
G#5	1351	Dr SdMdRim
A 5	1052	Dr BdGate
A#5	1353	Dr SdGate1
B 5	1053	Dr BdFXGate
C 6	1073	Dr BdD&B1

PRE 37 Ambient

Нота	№ сигнала	Наименование сигнала
C 0	1068	Dr BdBlip
C#0	814	Se HiQ2
D 0	1349	Dr SdPcRim2
D#0	813	Se HiQ1
E 0	1451	Dr SdAnCR
F 0	1661	Dr TomSyn1
F#0	1619	Dr HHClSyn
G 0	1661	Dr TomSyn1
G#0	1621	Dr HHClFx
A 0	1662	Dr TomSyn2
A#0	1620	Dr HHOpSyn
B 0	1065	Dr BdAnCR
C 1	1054	Dr BdT9-1
C#1	1368	Dr SdHpStk3
D 1	1455	Dr SdJngl1
D#1	953	Pc ClapT9
E 1	1455	Dr SdJngl1
F 1	1660	Dr TomT8
F#1	1601	Dr HHClT8-2
G 1	1660	Dr TomT8
G#1	1600	Dr HHOpT8-1
A 1	1660	Dr TomT8
A#1	1602	Dr HHOpT8-2
B 1	1660	Dr TomT8
C 2	1660	Dr TomT8
C#2	1712	Dr CrashSyn
D 2	1660	Dr TomT8
D#2	1713	Dr RideT9
E 2	1674	Dr Crash
F 2	1699	Dr CupMono
F#2	913	Pc TambrnHit
G 2	1674	Dr Crash
G#2	958	Pc CowBelT8
A 2	1670	Dr CrashSt
A#2	935	Pc Vibraslap
B 2	1682	Dr RideCym St
C 3	873	Pc Bongo H1
C#3	872	Pc Bongo L
D 3	859	Pc CongaTip
D#3	858	Pc CongaOpSlp
E 3	857	Pc Conga Opn
F 3	875	Pc TmbaleH1-3
F#3	879	Pc TmbaleL1-3
G 3	791	Se Glass
G#3	791	Se Glass
A 3	894	Pc Cabasa1
A#3	967	Pc MarcsT8
B 3	829	Se Bird
C 4	779	Me EngnRoomSt
C#4	811	Se ElPerc14
D 4	831	Se Gunshot
D#4	969	Pc ClaveT8
E 4	934	Pc WoodBlock
F 4	934	Pc WoodBlock
F#4	964	Pc TambrnAnCR
G 4	960	Pc CowBelAnCR
G#4	939	Pc TriangleMt
A 4	938	Pc TriangleOp
A#4	962	Pc AnaShaker
B 4	951	Pc SleighBel
C 5	952	Pc BellTree
C#5	1447	Dr SdT8-5
D 5	765	Me Sonar1
D#5	1447	Dr SdT8-5
E 5	765	Me Sonar1
F 5	749	Me Bubble
F#5	1447	Dr SdT8-5
G 5	749	Me Bubble
G#5	1447	Dr SdT8-5
A 5	738	Me Eery
A#5	1447	Dr SdT8-5
B 5	733	Me WindChime
C 6	733	Me WindChime

PRE 38 Jazz Kit

Нота	№ сигнала	Наименование сигнала
C 0	1044	Dr BdRoom2
C#0	1393	Dr SdBrMtR
D 0	1400	Dr SdBSwrAtSt
D#0	1394	Dr SdBrMt2St
E 0	1400	Dr SdBSwrAtSt
F 0	1387	Dr SdLvRolSt
F#0	932	Pc Castanet
G 0	1318	Dr SdHip1St
G#0	930	Pc Stick
A 0	1013	Dr BdFkML
A#0	1363	Dr SdRkStk2St
B 0	1029	Dr BdFkSonSt
C 1	1008	Dr BdFkSt1-2
C#1	1376	Dr SdClRmSt
D 1	1303	Dr SdTgt1St
D#1	940	Pc HandClapSt
E 1	1282	Dr SdBhSt1-3
F 1	1636	Dr TomFlr St
F#1	1546	Dr HHClFtSt
G 1	1636	Dr TomFlr St
G#1	1521	Dr HHPdl3 St
A 1	1632	Dr TomLow St
A#1	1554	Dr HHOp2St
B 1	1628	Dr TomMid St
C 2	1628	Dr TomMid St
C#2	1670	Dr CrashSt
D 2	1624	Dr TomHi St
D#2	1682	Dr RideCym St
E 2	1701	Dr ChinaSt
F 2	1690	Dr RideCup St
F#2	913	Pc TambrnHit
G 2	1706	Dr SplashSt
G#2	945	Pc Cowbell1
A 2	1670	Dr CrashSt
A#2	935	Pc Vibraslap
B 2	1682	Dr RideCym St
C 3	873	Pc Bongo H1
C#3	872	Pc Bongo L
D 3	859	Pc CongaTip
D#3	858	Pc CongaOpSlp
E 3	857	Pc Conga Opn
F 3	876	Pc TimbaleHi1
F#3	876	Pc TimbaleHi1
G 3	923	Pc AgogoLo
G#3	923	Pc AgogoLo
A 3	894	Pc Cabasa1
A#3	891	Pc MaracasSlr
B 3	1397	Dr SdBrSwrSt
C 4	1397	Dr SdBrSwrSt
C#4	926	Pc GuiroShort
D 4	925	Pc GuiroLong
D#4	933	Pc Clave
E 4	934	Pc WoodBlock
F 4	934	Pc WoodBlock
F#4	871	Pc CuicaHi
G 4	870	Pc CuicaLo
G#4	939	Pc TriangleMt
A 4	938	Pc TriangleOp
A#4	900	Pc Shaker 2
B 4	951	Pc SleighBel
C 5	952	Pc BellTree
C#5	1274	Dr SdBlL1-3
D 5	1229	Dr SdFkAySt
D#5	1290	Dr SdBhR1-3
E 5	1268	Dr SdBlSt1-2
F 5	1021	Dr BdLoL
F#5	1355	Dr SdLdwHMono
G 5	1039	Dr BdDry2
G#5	1400	Dr SdBSwrAtSt
A 5	1100	Dr BdSlimy
A#5	1390	Dr SdRollMono
B 5	1007	Dr BdNm2R
C 6	1674	Dr Crash

PRE 39 Orchestral

Нота	№ сигнала	Наименование сигнала
C 0	971	Pc AnaClick
C#0	1395	Dr SdBrMt2L
D 0	1399	Dr SdBrSwrR
D#0	1395	Dr SdBrMt2L
E 0	1402	Dr SdBrSwrAtR
F 0	1421	Dr SdMrcRolSt
F#0	932	Pc Castanet
G 0	1404	Dr SdMrc1S St
G#0	930	Pc Stick
A 0	1049	Dr GrnCasMtSt
A#0	1409	Dr SdMrc1H L
B 0	1049	Dr GrnCasMtSt
C 1	1046	Dr GrnCasOpSt
C#1	1378	Dr SdClRmR
D 1	1405	Dr SdMrc1H St
D#1	940	Pc HandClapSt
E 1	1414	Dr SdMrc2H St
F 1	105	Cp TimpStSw
F#1	1498	Dr HHClS1-4St
G 1	105	Cp TimpStSw
G#1	1523	Dr HHPdl1-3 R
A 1	105	Cp TimpStSw
A#1	1534	Dr HHOpn1-2St
B 1	105	Cp TimpStSw
C 2	105	Cp TimpStSw
C#2	1676	Dr HndCymOpSt
D 2	105	Cp TimpStSw
D#2	1682	Dr RideCym St
E 2	1701	Dr ChinaSt
F 2	1690	Dr RideCup St
F#2	913	Pc TambrnHit
G 2	1679	Dr HndCymMtSt
G#2	946	Pc Cowbell2
A 2	1666	Dr CrashCymSt
A#2	935	Pc Vibraslap
B 2	1686	Dr RideSt
C 3	873	Pc Bongo H1
C#3	872	Pc Bongo L
D 3	859	Pc CongaTip
D#3	857	Pc Conga Opn
E 3	866	Pc TumbaOpen
F 3	875	Pc TmbaleH1-3
F#3	879	Pc TmbaleL1-3
G 3	922	Pc AgogoHi
G#3	923	Pc AgogoLo
A 3	893	Pc Cabasa1-2
A#3	891	Pc MaracasSlr
B 3	936	Pc Whistle
C 4	936	Pc Whistle
C#4	926	Pc GuiroShort
D 4	925	Pc GuiroLong
D#4	933	Pc Clave
E 4	934	Pc WoodBlock
F 4	934	Pc WoodBlock
F#4	871	Pc CuicaHi
G 4	870	Pc CuicaLo
G#4	939	Pc TriangleMt
A 4	938	Pc TriangleOp
A#4	899	Pc Shaker 1
B 4	951	Pc SleighBel
C 5	952	Pc BellTree
C#5	934	Pc WoodBlock
D 5	934	Pc WoodBlock
D#5	934	Pc WoodBlock
E 5	934	Pc WoodBlock
F 5	934	Pc WoodBlock
F#5	934	Pc WoodBlock
G 5	934	Pc WoodBlock
G#5	934	Pc WoodBlock
A 5	934	Pc WoodBlock
A#5	934	Pc WoodBlock
B 5	934	Pc WoodBlock
C 6	934	Pc WoodBlock

PRE 40 Garage

Нота	№ сигнала	Наименование сигнала
C 0	1095	Dr BdHardLong
C#0	1054	Dr BdT9-1
D 0	1100	Dr BdSlimy
D#0	1097	Dr BdAnHard
E 0	1086	Dr BdDist4
F 0	1107	Dr BdElComp3
F#0	1077	Dr BdHipDp
G 0	1090	Dr BdFxHmr
G#0	1056	Dr BdT9-3
A 0	1063	Dr BdT8-3
A#0	1093	Dr BdSus
B 0	1076	Dr BdR&B2
C 1	1058	Dr BdT9Hd1
C#1	1100	Dr BdSlimy
D 1	1443	Dr SdT8-1
D#1	1448	Dr SdT8Rim
E 1	1492	Dr SdClappy
F 1	1273	Dr SdBl3St
F#1	1536	Dr HHOpn2 St
G 1	1601	Dr HHClT8-2
G#1	1536	Dr HHOpn2 St
A 1	1602	Dr HHOpT8-2
A#1	1536	Dr HHOpn2 St
B 1	1602	Dr HHOpT8-2
C 2	954	Pc ClapAnSm
C#2	1670	Dr CrashSt
D 2	1710	Dr CrashT9
D#2	1682	Dr RideCym St
E 2	1713	Dr RideT9
F 2	971	Pc AnaClick
F#2	969	Pc ClaveT8
G 2	954	Pc ClapAnSm
G#2	953	Pc ClapT9
A 2	962	Pc AnaShaker
A#2	957	Pc CongaT8
B 2	957	Pc CongaT8
C 3	1451	Dr SdAnCR
C#3	1381	Dr SdRkRolSt
D 3	922	Pc AgogoHi
D#3	1704	Dr ChinaRL
E 3	814	Se HiQ2
F 3	813	Se HiQ1
F#3	797	Se Zap2
G 3	796	Se Zap1
G#3	797	Se Zap2
A 3	823	Se DoorSqk
A#3	855	Se ScratchCb3
B 3	1793	Se Ag FX27 St
C 4	265	Gt PlayFx Mix
C#4	837	Se ScratchHiF
D 4	70	Ep Wurli+
D#4	70	Ep Wurli+
E 4	70	Ep Wurli+
F 4	760	Me ResoXFade
F#4	765	Me Sonar1
G 4	776	Me VoxDrum
G#4	776	Me VoxDrum
A 4	776	Me VoxDrum
A#4	1620	Dr HHOpSyn
B 4	1619	Dr HHClSyn
C 5	652	Wv TriWv
C#5	652	Wv TriWv
D 5	652	Wv TriWv
D#5	652	Wv TriWv
E 5	652	Wv TriWv
F 5	652	Wv TriWv
F#5	652	Wv TriWv
G 5	652	Wv TriWv
G#5	652	Wv TriWv
A 5	652	Wv TriWv
A#5	652	Wv TriWv
B 5	652	Wv TriWv
C 6	652	Wv TriWv

PRE 41 All Round

Нота	№ сигнала	Наименование сигнала
C 0	1095	Dr BdHardLong
C#0	1094	Dr BdTekPower
D 0	1087	Dr BdDist5
D#0	1085	Dr BdDist3
E 0	1083	Dr BdDist1
F 0	1073	Dr BdD&B1
F#0	1068	Dr BdBlip
G 0	1064	Dr BdAnSm
G#0	1062	Dr BdT8-2
A 0	1061	Dr BdT8-1
A#0	1060	Dr BdT9Hd3
B 0	1055	Dr BdT9-2
C 1	1056	Dr BdT9-3
C#1	1093	Dr BdSus
D 1	1436	Dr SdT9-1
D#1	1442	Dr SdT9Rim
E 1	1439	Dr SdT9-4
F 1	1659	Dr TomT9Lo
F#1	1597	Dr HHClT9
G 1	1659	Dr TomT9Lo
G#1	1598	Dr HHOpT9
A 1	1659	Dr TomT9Lo
A#1	1598	Dr HHOpT9
B 1	953	Pc ClapT9
C 2	954	Pc ClapAnSm
C#2	1710	Dr CrashT9
D 2	957	Pc CongaT8
D#2	1713	Dr RideT9
E 2	957	Pc CongaT8
F 2	971	Pc AnaClick
F#2	969	Pc ClaveT8
G 2	967	Pc MarcsT8
G#2	964	Pc TambrnAnCR
A 2	962	Pc AnaShaker
A#2	958	Pc CowBelT8
B 2	960	Pc CowBelAnCR
C 3	1443	Dr SdT8-1
C#3	1444	Dr SdT8-2
D 3	1445	Dr SdT8-3
D#3	1451	Dr SdAnCR
E 3	1455	Dr SdJngl1
F 3	1459	Dr SdD&B1
F#3	1462	Dr SdD&B4
G 3	1463	Dr SdR&B1
G#3	1465	Dr SdR&B2
A 3	1466	Dr SdHip1
A#3	1494	Dr SdWood
B 3	1493	Dr SdTimbr
C 4	1599	Dr HHClT8-1
C#4	1600	Dr HHOpT8-1
D 4	1601	Dr HHClT8-2
D#4	1602	Dr HHOpT8-2
E 4	1521	Dr HHPdl3 St
F 4	1536	Dr HHOpn2 St
F#4	1536	Dr HHOpn2 St
G 4	1617	Dr HHClLoFi
G#4	1618	Dr HHOpLoFi
A 4	1619	Dr HHClSyn
A#4	1620	Dr HHOpSyn
B 4	962	Pc AnaShaker
C 5	963	Pc TambrnRX5
C#5	912	Pc TambrnSw
D 5	946	Pc Cowbell2
D#5	872	Pc Bongo L
E 5	876	Pc TimbaleHi1
F 5	934	Pc WoodBlock
F#5	1095	Dr BdHardLong
G 5	866	Pc TumbaOpen
G#5	864	Pc Quint2Opn
A 5	818	Se FxGun2
A#5	816	Se Bomb
B 5	1091	Dr BdZapHrd
C 6	850	Se ScratchHp2

PRE 42 Rock Multi

Нота	№ сигнала	Наименование сигнала
C 0	999	Dr BdNmSt1-2
C#0	1360	Dr SdRkStk1St
D 0	1335	Dr SdRkOp2St
D#0	1381	Dr SdRkRolSt
E 0	1326	Dr SdRkOp1St
F 0	1632	Dr TomLow St
F#0	1546	Dr HHClFtSt
G 0	1632	Dr TomLow St
G#0	1521	Dr HHPdl3 St
A 0	1628	Dr TomMid St
A#0	1536	Dr HHOpn2 St
B 0	1624	Dr TomHi St
C 1	1035	Dr BdRk2St
C#1	1360	Dr SdRkStk1St
D 1	1335	Dr SdRkOp2St
D#1	940	Pc HandClapSt
E 1	1338	Dr SdRkMte2St
F 1	1648	Dr TomRkLoSt
F#1	1558	Dr HHClRkStSw
G 1	1648	Dr TomRkLoSt
G#1	1570	Dr HHPdRkStSw
A 1	1644	Dr TomRkMdSt
A#1	1582	Dr HHOpRkStSw
B 1	1644	Dr TomRkMdSt
C 2	1640	Dr TomRkHiSt
C#2	1670	Dr CrashSt
D 2	1640	Dr TomRkHiSt
D#2	1682	Dr RideCym St
E 2	1701	Dr ChinaSt
F 2	1690	Dr RideCup St
F#2	912	Pc TambrnSw
G 2	1706	Dr SplashSt
G#2	945	Pc Cowbell1
A 2	1670	Dr CrashSt
A#2	899	Pc Shaker 1
B 2	1682	Dr RideCym St
C 3	1032	Dr BdRk1St
C#3	1363	Dr SdRkStk2St
D 3	1326	Dr SdRkOp1St
D#3	953	Pc ClapT9
E 3	1329	Dr SdRkMte1St
F 3	1648	Dr TomRkLoSt
F#3	1558	Dr HHClRkStSw
G 3	1648	Dr TomRkLoSt
G#3	1578	Dr HHPdlRkSt
A 3	1644	Dr TomRkMdSt
A#3	1586	Dr HHHfOpRkSt
B 3	1644	Dr TomRkMdSt
C 4	1640	Dr TomRkHiSt
C#4	1670	Dr CrashSt
D 4	1640	Dr TomRkHiSt
D#4	1687	Dr RideL
E 4	1701	Dr ChinaSt
F 4	1690	Dr RideCup St
F#4	913	Pc TambrnHit
G 4	1706	Dr SplashSt
G#4	948	Pc MamboBl2
A 4	1670	Dr CrashSt
A#4	906	Pc ShekereDw
B 4	1688	Dr RideR
C 5	1008	Dr BdFkSt1-2
C#5	1360	Dr SdRkStk1St
D 5	1332	Dr SdRkRim1St
D#5	1344	Dr SdRkFlmSt
E 5	1341	Dr SdRkRim2St
F 5	1636	Dr TomFlr St
F#5	1502	Dr HHCls4 St
G 5	1632	Dr TomLow St
G#5	1521	Dr HHPdl3 St
A 5	1628	Dr TomMid St
A#5	1554	Dr HHOp2St
B 5	1628	Dr TomMid St
C 6	1624	Dr TomHi St

PRE 43 Hip Multi

Нота	№ сигнала	Наименование сигнала
C 0	1063	Dr BdT8-3
C#0	1448	Dr SdT8Rim
D 0	1488	Dr SdDodgL
D#0	953	Pc ClapT9
E 0	1468	Dr SdHip3
F 0	1063	Dr BdT8-3
F#0	1612	Dr HHClTek
G 0	1063	Dr BdT8-3
G#0	1613	Dr HHOpTek
A 0	1063	Dr BdT8-3
A#0	1613	Dr HHOpTek
B 0	1063	Dr BdT8-3
C 1	1077	Dr BdHipDp
C#1	1369	Dr SdHpStk4
D 1	1470	Dr SdHipRm1
D#1	942	Pc HandClapR
E 1	1467	Dr SdHip2
F 1	1660	Dr TomT8
F#1	1601	Dr HHClT8-2
G 1	1660	Dr TomT8
G#1	1605	Dr HHOpAnCR
A 1	1660	Dr TomT8
A#1	1600	Dr HHOpT8-1
B 1	1660	Dr TomT8
C 2	1660	Dr TomT8
C#2	1710	Dr CrashT9
D 2	1660	Dr TomT8
D#2	1712	Dr CrashSyn
E 2	1712	Dr CrashSyn
F 2	1711	Dr CrashT8
F#2	963	Pc TambrnRX5
G 2	1708	Dr SplashR
G#2	958	Pc CowBelT8
A 2	1710	Dr CrashT9
A#2	960	Pc CowBelAnCR
B 2	1713	Dr RideT9
C 3	1077	Dr BdHipDp
C#3	1370	Dr SdHpStk5
D 3	1471	Dr SdHipRm2
D#3	941	Pc HandClapL
E 3	1466	Dr SdHip1
F 3	1659	Dr TomT9Lo
F#3	1603	Dr HHClRX5
G 3	1659	Dr TomT9Lo
G#3	1604	Dr HHClAnCR
A 3	1659	Dr TomT9Lo
A#3	1602	Dr HHOpT8-2
B 3	1659	Dr TomT9Lo
C 4	1658	Dr TomT9Hi
C#4	1672	Dr CrashR
D 4	1658	Dr TomT9Hi
D#4	1711	Dr CrashT8
E 4	1712	Dr CrashSyn
F 4	1711	Dr CrashT8
F#4	913	Pc TambrnHit
G 4	1703	Dr ChinaR
G#4	959	Pc CowBelRX11
A 4	1671	Dr CrashL
A#4	945	Pc Cowbell1
B 4	1688	Dr RideR
C 5	1077	Dr BdHipDp
C#5	1375	Dr SdHipStk8
D 5	1469	Dr SdHipGate
D#5	1467	Dr SdHip2
E 5	1474	Dr SdHipRm5
F 5	1665	Dr TomDistLo
F#5	1614	Dr HHClHip
G 5	1665	Dr TomDistLo
G#5	1615	Dr HHPdlHip
A 5	1664	Dr TomDistHi
A#5	1616	Dr HHOpHip
B 5	1664	Dr TomDistHi
C 6	1663	Dr TomAnSm

PRE 44 Percussion

Нота	№ сигнала	Наименование сигнала
C 0	494	Pc Wataiko
C#0	519	Pc Udo Hi
D 0	497	Pc DjembeOp
D#0	862	Pc Quint1Opn
E 0	520	Pc Udo Low
F 0	518	Pc UdoFinger
F#0	519	Pc Udo Hi
G 0	499	Pc TablaBya
G#0	919	Pc TmbourimOp
A 0	501	Pc TablaMut
A#0	500	Pc TablaNah
B 0	501	Pc TablaMut
C 1	105	Cp TimpStSw
C#1	774	Me Hit Uhh
D 1	873	Pc Bongo H1
D#1	953	Pc ClapT9
E 1	939	Pc TriangleMt
F 1	938	Pc TriangleOp
F#1	932	Pc Castanet
G 1	932	Pc Castanet
G#1	932	Pc Castanet
A 1	925	Pc GuiroLong
A#1	927	Pc GuiroSwp
B 1	926	Pc GuiroShort
C 2	935	Pc Vibraslap
C#2	933	Pc Clave
D 2	969	Pc ClaveT8
D#2	870	Pc CuicaLo
E 2	871	Pc CuicaHi
F 2	879	Pc TmbaleL1-3
F#2	934	Pc WoodBlock
G 2	881	Pc TimbaleLo2
G#2	934	Pc WoodBlock
A 2	875	Pc TmbaleH1-3
A#2	950	Pc ChaCha
B 2	877	Pc TimbaleHi2
C 3	884	Pc TmblPailaL
C#3	884	Pc TmblPailaL
D 3	883	Pc TmblPailaH
D#3	947	Pc MamboBl1
E 3	872	Pc Bongo L
F 3	872	Pc Bongo L
F#3	943	Pc Handbell L
G 3	873	Pc Bongo H1
G#3	944	Pc Handbell H
A 3	873	Pc Bongo H1
A#3	923	Pc AgogoLo
B 3	922	Pc AgogoHi
C 4	860	Pc CongaBtm
C#4	859	Pc CongaTip
D 4	867	Pc TumbaSlp
D#4	891	Pc MaracasSlr
E 4	866	Pc TumbaOpen
F 4	860	Pc CongaBtm
F#4	859	Pc CongaTip
G 4	858	Pc CongaOpSlp
G#4	899	Pc Shaker 1
A 4	857	Pc Conga Opn
A#4	894	Pc Cabasa1
B 4	893	Pc Cabasa1-2
C 5	860	Pc CongaBtm
C#5	859	Pc CongaTip
D 5	863	Pc Quint1Slp
D#5	899	Pc Shaker 1
E 5	864	Pc Quint2Opn
F 5	896	Pc Caxixi1-2
F#5	914	Pc TambrnShk
G 5	913	Pc TambrnHit
G#5	912	Pc TambrnSw
A 5	913	Pc TambrnHit
A#5	951	Pc SleighBel
B 5	936	Pc Whistle
C 6	936	Pc Whistle

PRE 45 Latin Perc

Нота	№ сигнала	Наименование сигнала
C 0	1026	Dr BdLSonSt
C#0	1363	Dr SdRkStk2St
D 0	1217	Dr SdFkSt1/3
D#0	1670	Dr CrashSt
E 0	1706	Dr SplashSt
F 0	1632	Dr TomLow St
F#0	1498	Dr HHCls1-4St
G 0	1632	Dr TomLow St
G#0	1521	Dr HHPdl3 St
A 0	1628	Dr TomMid St
A#0	1536	Dr HHOpn2 St
B 0	1624	Dr TomHi St
C 1	859	Pc CongaTip
C#1	860	Pc CongaBtm
D 1	867	Pc TumbaSlp
D#1	933	Pc Clave
E 1	866	Pc TumbaOpen
F 1	859	Pc CongaTip
F#1	860	Pc CongaBtm
G 1	858	Pc CongaOpSlp
G#1	943	Pc Handbell L
A 1	857	Pc Conga Opn
A#1	944	Pc Handbell H
B 1	947	Pc MamboBl1
C 2	859	Pc CongaTip
C#2	860	Pc CongaBtm
D 2	863	Pc Quint1Slp
D#2	950	Pc ChaCha
E 2	862	Pc Quint1Opn
F 2	872	Pc Bongo L
F#2	873	Pc Bongo H1
G 2	874	Pc Bongo H2
G#2	880	Pc TimbaleLo1
A 2	884	Pc TmblPailaL
A#2	876	Pc TimbaleHi1
B 2	883	Pc TmblPailaH
C 3	934	Pc WoodBlock
C#3	934	Pc WoodBlock
D 3	906	Pc ShekereDw
D#3	907	Pc ShekereUp
E 3	908	Pc ShekereSap
F 3	891	Pc MaracasSlr
F#3	892	Pc MaracasStc
G 3	925	Pc GuiroLong
G#3	927	Pc GuiroSwp
A 3	926	Pc GuiroShort
A#3	929	Pc SurdoMt
B 3	928	Pc SurdoOp
C 4	917	Pc PandierTip
C#4	918	Pc PandroHeel
D 4	916	Pc PandierThm
D#4	915	Pc PandieroOp
E 4	920	Pc TmbourmFng
F 4	919	Pc TmbourimOp
F#4	921	Pc TmbourimMt
G 4	924	Pc AgogoLoTap
G#4	923	Pc AgogoLo
A 4	922	Pc AgogoHi
A#4	938	Pc TriangleOp
B 4	939	Pc TriangleMt
C 5	900	Pc Shaker 2
C#5	899	Pc Shaker 1
D 5	901	Pc Shaker 3
D#5	894	Pc Cabasa1
E 5	895	Pc Cabasa2
F 5	897	Pc Caxixi1
F#5	898	Pc Caxixi2
G 5	870	Pc CuicaLo
G#5	871	Pc CuicaHi
A 5	936	Pc Whistle
A#5	936	Pc Whistle
B 5	935	Pc Vibraslap
C 6	952	Pc BellTree

PRE 46 Gtr/Bs Fx

Нота	№ сигнала	Наименование сигнала
C 0	1833	Se Ab FX06
C#0	1833	Se Ab FX06
D 0	265	Gt PlayFx Mix
D#0	264	Gt PwrChdMono
E 0	264	Gt PwrChdMono
F 0	1828	Se Ab FX01
F#0	1718	Se Ag FX02 St
G 0	1841	Se Eb FX 05
G#0	1852	Se Eb FX 16
A 0	1837	Se Eb FX 01
A#0	1810	Se Eg FX06
B 0	1853	Se Eb FX 17
C 1	1840	Se Eb FX 04
C#1	1846	Se Eb FX 10
D 1	265	Gt PlayFx Mix
D#1	1847	Se Eb FX 11
E 1	265	Gt PlayFx Mix
F 1	1854	Se Eb FX 18
F#1	1852	Se Eb FX 16
G 1	1854	Se Eb FX 18
G#1	1853	Se Eb FX 17
A 1	1854	Se Eb FX 18
A#1	1817	Se Eg FX13
B 1	1854	Se Eb FX 18
C 2	1854	Se Eb FX 18
C#2	1799	Se Ag FX29 St
D 2	1854	Se Eb FX 18
D#2	1847	Se Eb FX 11
E 2	1799	Se Ag FX29 St
F 2	1847	Se Eb FX 11
F#2	1846	Se Eb FX 10
G 2	1799	Se Ag FX29 St
G#2	265	Gt PlayFx Mix
A 2	1799	Se Ag FX29 St
A#2	1849	Se Eb FX 13
B 2	1847	Se Eb FX 11
C 3	1846	Se Eb FX 10
C#3	1846	Se Eb FX 10
D 3	1838	Se Eb FX 02
D#3	1844	Se Eb FX 08
E 3	1854	Se Eb FX 18
F 3	1836	Se Ab FX09
F#3	1836	Se Ab FX09
G 3	1834	Se Ab FX07
G#3	1834	Se Ab FX07
A 3	1833	Se Ab FX06
A#3	1836	Se Ab FX09
B 3	265	Gt PlayFx Mix
C 4	265	Gt PlayFx Mix
C#4	1858	Se Eb FX 22
D 4	1730	Se Ag FX06 St
D#4	1852	Se Eb FX 16
E 4	1852	Se Eb FX 16
F 4	1839	Se Eb FX 03
F#4	265	Gt PlayFx Mix
G 4	265	Gt PlayFx Mix
G#4	1847	Se Eb FX 11
A 4	1853	Se Eb FX 17
A#4	1718	Se Ag FX02 St
B 4	1850	Se Eb FX 14
C 5	1825	Se Eg FX21
C#5	1824	Se Eg FX20
D 5	1823	Se Eg FX19
D#5	265	Gt PlayFx Mix
E 5	265	Gt PlayFx Mix
F 5	265	Gt PlayFx Mix
F#5	265	Gt PlayFx Mix
G 5	287	Ba Pick Dd FX
G#5	1858	Se Eb FX 22
A 5	1841	Se Eb FX 05
A#5	1851	Se Eb FX 15
B 5	325	Ba EBassFX
C 6	1855	Se Eb FX 19

PRE 47 Wacko Kit

Нота	№ сигнала	Наименование сигнала
C 0	1837	Se Eb FX 01
C#0	797	Se Zap2
D 0	1609	Dr HHPdlD&B
D#0	941	Pc HandClapL
E 0	845	Se ScratchVoF
F 0	794	Se IndusTom
F#0	1494	Dr SdWood
G 0	794	Se IndusTom
G#0	1484	Dr SdClpAna
A 0	794	Se IndusTom
A#0	1490	Dr SdFMRim
B 0	1053	Dr BdFXGate
C 1	1090	Dr BdFxHmr
C#1	858	Pc CongaOpSlp
D 1	1489	Dr SdFM
D#1	941	Pc HandClapL
E 1	1493	Dr SdTimbr
F 1	1662	Dr TomSyn2
F#1	1619	Dr HHClSyn
G 1	1662	Dr TomSyn2
G#1	1620	Dr HHOpSyn
A 1	1662	Dr TomSyn2
A#1	1620	Dr HHOpSyn
B 1	1662	Dr TomSyn2
C 2	1662	Dr TomSyn2
C#2	1595	Dr HHOpMono
D 2	765	Me Sonar1
D#2	1600	Dr HHOpT8-1
E 2	1595	Dr HHOpMono
F 2	1695	Dr CupL
F#2	951	Pc SleighBel
G 2	1602	Dr HHOpT8-2
G#2	760	Me ResoXFade
A 2	1671	Dr CrashL
A#2	833	Se RainLoop
B 2	1696	Dr CupR
C 3	747	Me AirHoseL
C#3	747	Me AirHoseL
D 3	519	Pc Udo Hi
D#3	607	Wv MgBass2
E 3	608	Wv MgBass3
F 3	1833	Se Ab FX06
F#3	1833	Se Ab FX06
G 3	923	Pc AgogoLo
G#3	923	Pc AgogoLo
A 3	1623	Dr HHOpHuman
A#3	815	Se VoxHitRev
B 3	813	Se HiQ1
C 4	813	Se HiQ1
C#4	762	Me LfoSeq
D 4	762	Me LfoSeq
D#4	734	Me BellAir
E 4	740	Me HH Hit
F 4	740	Me HH Hit
F#4	754	Me OohFB
G 4	754	Me OohFB
G#4	757	Me Mind Bell
A 4	791	Se Glass
A#4	750	Me Swarm
B 4	818	Se FxGun2
C 5	751	Me Lektronica
C#5	265	Gt PlayFx Mix
D 5	831	Se Gunshot
D#5	822	Se Police
E 5	790	Se Ripper
F 5	265	Gt PlayFx Mix
F#5	817	Se TapeRewnd
G 5	819	Se FxGun1
G#5	816	Se Bomb
A 5	797	Se Zap2
A#5	795	Se NzBurst
B 5	770	Me StabGiant
C 6	769	Me StabOrch

PRE 48 Wood Bits

Нота	№ сигнала	Наименование сигнала
C 0	969	Pc ClaveT8
C#0	1372	Dr SdHpStk6L
D 0	925	Pc GuiroLong
D#0	1373	Dr SdHpStk6R
E 0	925	Pc GuiroLong
F 0	1751	Se Ag FX13 St
F#0	932	Pc Castanet
G 0	1847	Se Eb FX 11
G#0	930	Pc Stick
A 0	1844	Se Eb FX 08
A#0	1843	Se Eb FX 07
B 0	1658	Dr TomT9Hi
C 1	1853	Se Eb FX 17
C#1	1380	Dr SdClRim3
D 1	931	Pc Stick2
D#1	925	Pc GuiroLong
E 1	931	Pc Stick2
F 1	928	Pc SurdoOp
F#1	1450	Dr SdAnSmRim
G 1	928	Pc SurdoOp
G#1	954	Pc ClapAnSm
A 1	928	Pc SurdoOp
A#1	935	Pc Vibraslap
B 1	928	Pc SurdoOp
C 2	928	Pc SurdoOp
C#2	826	Se Seashore
D 2	928	Pc SurdoOp
D#2	1363	Dr SdRkStk2St
E 2	832	Se Applause
F 2	1361	Dr SdRkStk1L
F#2	914	Pc TambrnShk
G 2	826	Se Seashore
G#2	934	Pc WoodBlock
A 2	832	Se Applause
A#2	825	Se Helicopter
B 2	1365	Dr SdRkStk2R
C 3	858	Pc CongaOpSlp
C#3	858	Pc CongaOpSlp
D 3	932	Pc Castanet
D#3	932	Pc Castanet
E 3	934	Pc WoodBlock
F 3	884	Pc TmblPailaL
F#3	884	Pc TmblPailaL
G 3	930	Pc Stick
G#3	931	Pc Stick2
A 3	896	Pc Caxixi1-2
A#3	898	Pc Caxixi2
B 3	823	Se DoorSqk
C 4	823	Se DoorSqk
C#4	926	Pc GuiroShort
D 4	925	Pc GuiroLong
D#4	933	Pc Clave
E 4	934	Pc WoodBlock
F 4	934	Pc WoodBlock
F#4	823	Se DoorSqk
G 4	823	Se DoorSqk
G#4	934	Pc WoodBlock
A 4	933	Pc Clave
A#4	823	Se DoorSqk
B 4	941	Pc HandClapL
C 5	950	Pc ChaCha
C#5	1335	Dr SdRkOp2St
D 5	1072	Dr BdJngl3
D#5	863	Pc Quint1Slp
E 5	1044	Dr BdRoom2
F 5	1023	Dr BdHSonSt
F#5	1358	Dr SdHeavy
G 5	928	Pc SurdoOp
G#5	1360	Dr SdRkStk1St
A 5	1100	Dr BdSlimy
A#5	1353	Dr SdGate1
B 5	1029	Dr BdFkSonSt
C 6	1052	Dr BdGate

PRE 49 Metal Bits

Нота	№ сигнала	Наименование сигнала
C 0	958	Pc CowBelT8
C#0	1512	Dr HHCls4 R
D 0	1696	Dr CupR
D#0	1620	Dr HHOpSyn
E 0	1695	Dr CupL
F 0	1690	Dr RideCup St
F#0	633	Wv FMMetal2
G 0	1682	Dr RideCym St
G#0	804	Se ElPerc7
A 0	946	Pc Cowbell2
A#0	1499	Dr HHCls1 St
B 0	950	Pc ChaCha
C 1	946	Pc Cowbell2
C#1	1619	Dr HHClSyn
D 1	1613	Dr HHOpTek
D#1	1601	Dr HHClT8-2
E 1	1603	Dr HHClRX5
F 1	946	Pc Cowbell2
F#1	1600	Dr HHOpT8-1
G 1	946	Pc Cowbell2
G#1	1619	Dr HHClSyn
A 1	946	Pc Cowbell2
A#1	1620	Dr HHOpSyn
B 1	946	Pc Cowbell2
C 2	946	Pc Cowbell2
C#2	1622	Dr HHOpFx
D 2	946	Pc Cowbell2
D#2	1690	Dr RideCup St
E 2	1605	Dr HHOpAnCR
F 2	1690	Dr RideCup St
F#2	912	Pc TambrnSw
G 2	1622	Dr HHOpFx
G#2	948	Pc MamboBl2
A 2	1622	Dr HHOpFx
A#2	951	Pc SleighBel
B 2	1698	Dr RideMono
C 3	88	Cp Vibraphone
C#3	88	Cp Vibraphone
D 3	92	Cp TubularBel
D#3	93	Cp Bell
E 3	96	Cp BrBell
F 3	883	Pc TmblPailaH
F#3	884	Pc TmblPailaL
G 3	93	Cp Bell
G#3	93	Cp Bell
A 3	1499	Dr HHCls1 St
A#3	1605	Dr HHOpAnCR
B 3	734	Me BellAir
C 4	733	Me WindChime
C#4	1589	Dr HHOpRkL
D 4	751	Me Lektronica
D#4	923	Pc AgogoLo
E 4	945	Pc Cowbell1
F 4	946	Pc Cowbell2
F#4	745	Me HiLo
G 4	745	Me HiLo
G#4	939	Pc TriangleMt
A 4	938	Pc TriangleOp
A#4	733	Me WindChime
B 4	951	Pc SleighBel
C 5	952	Pc BellTree
C#5	97	Cp SmBell
D 5	97	Cp SmBell
D#5	96	Cp BrBell
E 5	100	Cp Hibasi
F 5	86	Kb Harpscd
F#5	1355	Dr SdLdwHMono
G 5	88	Cp Vibraphone
G#5	1356	Dr SdBrRim
A 5	490	Cp Gamelan2
A#5	518	Pc UdoFinger
B 5	98	Cp FingerCym
C 6	93	Cp Bell

PRE 50 Hands Kit

Нота	№ сигнала	Наименование сигнала
C 0	501	Pc TablaMut
C#0	1391	Dr SdBrMtSt
D 0	1397	Dr SdBrSwrSt
D#0	1394	Dr SdBrMt2St
E 0	1400	Dr SdBSwrAtSt
F 0	1799	Se Ag FX29 St
F#0	931	Pc Stick2
G 0	916	Pc PandierThm
G#0	501	Pc TablaMut
A 0	1852	Se Eb FX 16
A#0	1763	Se Ag FX17 St
B 0	502	Pc TablaCmb
C 1	494	Pc Wataiko
C#1	863	Pc Quint1Slp
D 1	1394	Dr SdBrMt2St
D#1	940	Pc HandClapSt
E 1	1229	Dr SdFkAySt
F 1	520	Pc Udo Low
F#1	501	Pc TablaMut
G 1	520	Pc Udo Low
G#1	499	Pc TablaBya
A 1	519	Pc Udo Hi
A#1	500	Pc TablaNah
B 1	519	Pc Udo Hi
C 2	518	Pc UdoFinger
C#2	1688	Dr RideR
D 2	518	Pc UdoFinger
D#2	1690	Dr RideCup St
E 2	1700	Dr CupMono2
F 2	1690	Dr RideCup St
F#2	913	Pc TambrnHit
G 2	1690	Dr RideCup St
G#2	945	Pc Cowbell1
A 2	1698	Dr RideMono
A#2	935	Pc Vibraslap
B 2	1687	Dr RideL
C 3	873	Pc Bongo H1
C#3	872	Pc Bongo L
D 3	859	Pc CongaTip
D#3	858	Pc CongaOpSlp
E 3	857	Pc Conga Opn
F 3	875	Pc TmbaleH1-3
F#3	879	Pc TmbaleL1-3
G 3	922	Pc AgogoHi
G#3	923	Pc AgogoLo
A 3	920	Pc TmbourmFng
A#3	920	Pc TmbourmFng
B 3	941	Pc HandClapL
C 4	941	Pc HandClapL
C#4	925	Pc GuiroLong
D 4	925	Pc GuiroLong
D#4	518	Pc UdoFinger
E 4	499	Pc TablaBya
F 4	859	Pc CongaTip
F#4	519	Pc Udo Hi
G 4	519	Pc Udo Hi
G#4	518	Pc UdoFinger
A 4	98	Cp FingerCym
A#4	501	Pc TablaMut
B 4	951	Pc SleighBel
C 5	952	Pc BellTree
C#5	858	Pc CongaOpSlp
D 5	868	Pc TumbaTip
D#5	868	Pc TumbaTip
E 5	1844	Se Eb FX 08
F 5	868	Pc TumbaTip
F#5	1837	Se Eb FX 01
G 5	866	Pc TumbaOpen
G#5	1842	Se Eb FX 06
A 5	1724	Se Ag FX04 St
A#5	520	Pc Udo Low
B 5	498	Pc DjembeCmb
C 6	867	Pc TumbaSlp

PRE 51 Scratches

Нота	№ сигнала	Наименование сигнала
C 0	834	Se Scratch H
C#0	835	Se Scratch L
D 0	836	Se ScratchDwn
D#0	837	Se ScratchHiF
E 0	838	Se ScratchHiR
F 0	839	Se ScratchLoF
F#0	840	Se ScratchLoR
G 0	841	Se ScratchBdF
G#0	842	Se ScratchBdR
A 0	843	Se ScratchSdF
A#0	844	Se ScratchSdR
B 0	845	Se ScratchVoF
C 1	834	Se Scratch H
C#1	835	Se Scratch L
D 1	836	Se ScratchDwn
D#1	837	Se ScratchHiF
E 1	838	Se ScratchHiR
F 1	839	Se ScratchLoF
F#1	840	Se ScratchLoR
G 1	841	Se ScratchBdF
G#1	842	Se ScratchBdR
A 1	843	Se ScratchSdF
A#1	844	Se ScratchSdR
B 1	845	Se ScratchVoF
C 2	846	Se ScratchVoR
C#2	847	Se ScratchStp
D 2	848	Se ScratchSpn
D#2	849	Se ScratchHip
E 2	850	Se ScratchHp2
F 2	853	Se ScratchCmb
F#2	854	Se ScratchCb2
G 2	855	Se ScratchCb3
G#2	856	Se ScratchCb4
A 2	834	Se Scratch H
A#2	835	Se Scratch L
B 2	836	Se ScratchDwn
C 3	837	Se ScratchHiF
C#3	838	Se ScratchHiR
D 3	839	Se ScratchLoF
D#3	840	Se ScratchLoR
E 3	841	Se ScratchBdF
F 3	842	Se ScratchBdR
F#3	843	Se ScratchSdF
G 3	844	Se ScratchSdR
G#3	845	Se ScratchVoF
A 3	846	Se ScratchVoR
A#3	847	Se ScratchStp
B 3	848	Se ScratchSpn
C 4	849	Se ScratchHip
C#4	850	Se ScratchHp2
D 4	853	Se ScratchCmb
D#4	854	Se ScratchCb2
E 4	855	Se ScratchCb3
F 4	856	Se ScratchCb4
F#4	834	Se Scratch H
G 4	835	Se Scratch L
G#4	836	Se ScratchDwn
A 4	837	Se ScratchHiF
A#4	838	Se ScratchHiR
B 4	839	Se ScratchLoF
C 5	840	Se ScratchLoR
C#5	841	Se ScratchBdF
D 5	842	Se ScratchBdR
D#5	843	Se ScratchSdF
E 5	844	Se ScratchSdR
F 5	845	Se ScratchVoF
F#5	846	Se ScratchVoR
G 5	847	Se ScratchStp
G#5	848	Se ScratchSpn
A 5	849	Se ScratchHip
A#5	850	Se ScratchHp2
B 5	853	Se ScratchCmb
C 6	854	Se ScratchCb2

PRE 52 AcstSnares

Нота	№ сигнала	Наименование сигнала
C 0	1200	Dr SdNm1St
C#0	1201	Dr SdNm2St
D 0	1202	Dr SdNm3St
D#0	1203	Dr SdNm4St
E 0	1218	Dr SdFk1St
F 0	1219	Dr SdFk2St
F#0	1220	Dr SdFk3St
G 0	1229	Dr SdFkAySt
G#0	1236	Dr SdBs1St
A 0	1237	Dr SdBs2St
A#0	1238	Dr SdBs3St
B 0	1253	Dr SdSon1St
C 1	1254	Dr SdSon2St
C#1	1255	Dr SdSon3St
D 1	1256	Dr SdSon4St
D#1	1271	Dr SdBl1St
E 1	1272	Dr SdBl2St
F 1	1273	Dr SdBl3St
F#1	1286	Dr SdBh1St
G 1	1287	Dr SdBh2St
G#1	1288	Dr SdBh3St
A 1	1303	Dr SdTgt1St
A#1	1304	Dr SdTgt2St
B 1	1305	Dr SdTgt3St
C 2	1306	Dr SdTgt4St
C#2	1318	Dr SdHip1St
D 2	1319	Dr SdHip2St
D#2	1326	Dr SdRkOp1St
E 2	1329	Dr SdRkMte1St
F 2	1332	Dr SdRkRim1St
F#2	1335	Dr SdRkOp2St
G 2	1338	Dr SdRkMte2St
G#2	1341	Dr SdRkRim2St
A 2	1344	Dr SdRkFlmSt
A#2	1326	Dr SdRkOp1St
B 2	1329	Dr SdRkMte1St
C 3	1332	Dr SdRkRim1St
C#3	1335	Dr SdRkOp2St
D 3	1338	Dr SdRkMte2St
D#3	1341	Dr SdRkRim2St
E 3	1344	Dr SdRkFlmSt
F 3	1202	Dr SdNm3St
F#3	1229	Dr SdFkAySt
G 3	1238	Dr SdBs3St
G#3	1255	Dr SdSon3St
A 3	1288	Dr SdBh3St
A#3	1305	Dr SdTgt3St
B 3	1314	Dr SdTgt3R
C 4	1114	Dr SdBldSt1-4
C#4	1134	Dr SdSolSt1-4
D 4	1154	Dr SdPwrSt1-4
D#4	1174	Dr SdRngSt1-4
E 4	1351	Dr SdMdRim
F 4	1352	Dr SdAmb
F#4	1353	Dr SdGate1
G 4	1355	Dr SdLdwHMono
G#4	1356	Dr SdBrRim
A 4	1357	Dr SdDry
A#4	1358	Dr SdHeavy
B 4	1359	Dr SdGM
C 5	1360	Dr SdRkStk1St
C#5	1363	Dr SdRkStk2St
D 5	1376	Dr SdClRmSt
D#5	1379	Dr SdClRim2
E 5	1380	Dr SdClRim3
F 5	1381	Dr SdRkRolSt
F#5	1335	Dr SdRkOp2St
G 5	1387	Dr SdLvRolSt
G#5	1254	Dr SdSon2St
A 5	1390	Dr SdRollMono
A#5	1305	Dr SdTgt3St
B 5	1391	Dr SdBrMtSt
C 6	1400	Dr SdBSwrAtSt

PRE 53 StSnares

Нота	№ сигнала	Наименование сигнала
C 0	1194	Dr SdNmSt1-4
C#0	1195	Dr SdNmSt1-3
D 0	1196	Dr SdNmSt2-4
D#0	1197	Dr SdNmSt1-2
E 0	1198	Dr SdNmSt2-3
F 0	1199	Dr SdNmSt3-4
F#0	1200	Dr SdNm1St
G 0	1201	Dr SdNm2St
G#0	1202	Dr SdNm3St
A 0	1203	Dr SdNm4St
A#0	1214	Dr SdFkSt1-3
B 0	1215	Dr SdFkSt1-2
C 1	1216	Dr SdFkSt2-3
C#1	1217	Dr SdFkSt1/3
D 1	1218	Dr SdFk1St
D#1	1219	Dr SdFk2St
E 1	1220	Dr SdFk3St
F 1	1229	Dr SdFkAySt
F#1	1232	Dr SdBsSt1-3
G 1	1233	Dr SdBsSt1-2
G#1	1234	Dr SdBsSt2-3
A 1	1235	Dr SdBsSt1/3
A#1	1236	Dr SdBs1St
B 1	1237	Dr SdBs2St
C 2	1238	Dr SdBs3St
C#2	1247	Dr SdSonSt1-4
D 2	1248	Dr SdSonSt1-3
D#2	1249	Dr SdSonSt2-4
E 2	1250	Dr SdSonSt1-2
F 2	1251	Dr SdSonSt2-3
F#2	1252	Dr SdSonSt3-4
G 2	1253	Dr SdSon1St
G#2	1254	Dr SdSon2St
A 2	1255	Dr SdSon3St
A#2	1256	Dr SdSon4St
B 2	1267	Dr SdBlSt1-3
C 3	1268	Dr SdBlSt1-2
C#3	1269	Dr SdBlSt2-3
D 3	1270	Dr SdBlSt1/3
D#3	1271	Dr SdBl1St
E 3	1272	Dr SdBl2St
F 3	1273	Dr SdBl3St
F#3	1282	Dr SdBhSt1-3
G 3	1283	Dr SdBhSt1-2
G#3	1284	Dr SdBhSt2-3
A 3	1285	Dr SdBhSt1/3
A#3	1286	Dr SdBh1St
B 3	1287	Dr SdBh2St
C 4	1288	Dr SdBh3St
C#4	1297	Dr SdTgtSt1-4
D 4	1298	Dr SdTgtSt1-3
D#4	1299	Dr SdTgtSt2-4
E 4	1300	Dr SdTgtSt1-2
F 4	1301	Dr SdTgtSt2-3
F#4	1302	Dr SdTgtSt3-4
G 4	1303	Dr SdTgt1St
G#4	1304	Dr SdTgt2St
A 4	1305	Dr SdTgt3St
A#4	1306	Dr SdTgt4St
B 4	1318	Dr SdHip1St
C 5	1326	Dr SdRkOp1St
C#5	1329	Dr SdRkMte1St
D 5	1332	Dr SdRkRim1St
D#5	1335	Dr SdRkOp2St
E 5	1338	Dr SdRkMte2St
F 5	1341	Dr SdRkRim2St
F#5	1344	Dr SdRkFlmSt
G 5	1381	Dr SdRkRolSt
G#5	1326	Dr SdRkOp1St
A 5	1384	Dr SdRkRolDSt
A#5	1335	Dr SdRkOp2St
B 5	1387	Dr SdLvRolSt
C 6	1202	Dr SdNm3St

PRE 54 AllKicks

Нота	№ сигнала	Наименование сигнала
C 0	999	Dr BdNmSt1-2
C#0	972	Dr BdSnap1-2
D 0	982	Dr BdTigt1
D#0	1002	Dr BdNmL1-2
E 0	1008	Dr BdFkSt1-2
F 0	990	Dr BdAmb1-2
F#0	1010	Dr BdFk2St
G 0	1017	Dr BdHiSt
G#0	1020	Dr BdLoSt
A 0	1023	Dr BdHSonSt
A#0	1026	Dr BdLSonSt
B 0	1029	Dr BdFkSonSt
C 1	1032	Dr BdRk1St
C#1	1035	Dr BdRk2St
D 1	1038	Dr BdDry1
D#1	1039	Dr BdDry2
E 1	1040	Dr BdPop
F 1	1041	Dr BdVar1
F#1	1042	Dr BdVar2
G 1	1043	Dr BdRoom1
G#1	1044	Dr BdRoom2
A 1	1045	Dr BdRoom3
A#1	1052	Dr BdGate
B 1	1053	Dr BdFXGate
C 2	1054	Dr BdT9-1
C#2	1055	Dr BdT9-2
D 2	1056	Dr BdT9-3
D#2	1057	Dr BdT9-4
E 2	1058	Dr BdT9Hd1
F 2	1059	Dr BdT9Hd2
F#2	1060	Dr BdT9Hd3
G 2	1061	Dr BdT8-1
G#2	1062	Dr BdT8-2
A 2	1063	Dr BdT8-3
A#2	1064	Dr BdAnSm
B 2	1065	Dr BdAnCR
C 3	1066	Dr BdHuman1
C#3	1067	Dr BdHuman2
D 3	1068	Dr BdBlip
D#3	1069	Dr BdBlpHd
E 3	1070	Dr BdJngl1
F 3	1071	Dr BdJngl2
F#3	1072	Dr BdJngl3
G 3	1073	Dr BdD&B1
G#3	1074	Dr BdD&B2
A 3	1075	Dr BdR&B1
A#3	1076	Dr BdR&B2
B 3	1077	Dr BdHipDp
C 4	1078	Dr BdBrkDp
C#4	1079	Dr BdBreak1
D 4	1080	Dr BdBreak2
D#4	1081	Dr BdBreakHvy
E 4	1082	Dr BdBreakHrd
F 4	1083	Dr BdDist1
F#4	1084	Dr BdDist2
G 4	1085	Dr BdDist3
G#4	1086	Dr BdDist4
A 4	1087	Dr BdDist5
A#4	1088	Dr BdDistRM
B 4	1089	Dr Bd+HH
C 5	1090	Dr BdFxHmr
C#5	1091	Dr BdZapHrd
D 5	1092	Dr BdZapMid
D#5	1093	Dr BdSus
E 5	1094	Dr BdTekPower
F 5	1095	Dr BdHardLong
F#5	1096	Dr BdATite
G 5	1097	Dr BdAnHard
G#5	1098	Dr BdLofi
A 5	1099	Dr BdThkSkn
A#5	1100	Dr BdSlimy
B 5	1100	Dr BdSlimy
C 6	1100	Dr BdSlimy

PRE 55 DanceKick

Нота	№ сигнала	Наименование сигнала
C 0	1054	Dr BdT9-1
C#0	1054	Dr BdT9-1
D 0	1055	Dr BdT9-2
D#0	1056	Dr BdT9-3
E 0	1056	Dr BdT9-3
F 0	1057	Dr BdT9-4
F#0	1058	Dr BdT9Hd1
G 0	1059	Dr BdT9Hd2
G#0	1060	Dr BdT9Hd3
A 0	1060	Dr BdT9Hd3
A#0	1095	Dr BdHardLong
B 0	1065	Dr BdAnCR
C 1	1054	Dr BdT9-1
C#1	1055	Dr BdT9-2
D 1	1056	Dr BdT9-3
D#1	1057	Dr BdT9-4
E 1	1058	Dr BdT9Hd1
F 1	1059	Dr BdT9Hd2
F#1	1060	Dr BdT9Hd3
G 1	1061	Dr BdT8-1
G#1	1062	Dr BdT8-2
A 1	1063	Dr BdT8-3
A#1	1101	Dr BdElec1
B 1	1065	Dr BdAnCR
C 2	1066	Dr BdHuman1
C#2	1101	Dr BdElec1
D 2	1068	Dr BdBlip
D#2	1069	Dr BdBlpHd
E 2	1103	Dr BdElec3
F 2	1108	Dr BdElFX1
F#2	1109	Dr BdElFX2
G 2	1110	Dr BdElGate
G#2	1111	Dr BdElClick
A 2	1112	Dr BdElPwr1
A#2	1076	Dr BdR&B2
B 2	1077	Dr BdHipDp
C 3	1078	Dr BdBrkDp
C#3	1079	Dr BdBreak1
D 3	1113	Dr BdElPwr2
D#3	1081	Dr BdBreakHvy
E 3	1082	Dr BdBreakHrd
F 3	1083	Dr BdDist1
F#3	1084	Dr BdDist2
G 3	1085	Dr BdDist3
G#3	1086	Dr BdDist4
A 3	1087	Dr BdDist5
A#3	1102	Dr BdElec2
B 3	1105	Dr BdElComp1
C 4	1090	Dr BdFxHmr
C#4	1091	Dr BdZapHrd
D 4	1092	Dr BdZapMid
D#4	1093	Dr BdSus
E 4	1094	Dr BdTekPower
F 4	1095	Dr BdHardLong
F#4	1096	Dr BdATite
G 4	1097	Dr BdAnHard
G#4	1106	Dr BdElComp2
A 4	1107	Dr BdElComp3
A#4	1100	Dr BdSlimy
B 4	1052	Dr BdGate
C 5	1053	Dr BdFXGate
C#5	1054	Dr BdT9-1
D 5	1055	Dr BdT9-2
D#5	1056	Dr BdT9-3
E 5	1057	Dr BdT9-4
F 5	1058	Dr BdT9Hd1
F#5	1059	Dr BdT9Hd2
G 5	1060	Dr BdT9Hd3
G#5	1069	Dr BdBlpHd
A 5	1076	Dr BdR&B2
A#5	1092	Dr BdZapMid
B 5	1095	Dr BdHardLong
C 6	1096	Dr BdATite

PRE 56 EasySnares

Нота	№ сигнала	Наименование сигнала
C 0	1387	Dr SdLvRolSt
C#0	1400	Dr SdBSwrAtSt
D 0	1397	Dr SdBrSwrSt
D#0	1394	Dr SdBrMt2St
E 0	1391	Dr SdBrMtSt
F 0	1376	Dr SdClRmSt
F#0	1142	Dr SdSolSt1
G 0	1142	Dr SdSolSt1
G#0	1143	Dr SdSolSt2
A 0	1143	Dr SdSolSt2
A#0	1144	Dr SdSolSt3
B 0	1144	Dr SdSolSt3
C 1	1145	Dr SdSolSt4
C#1	1145	Dr SdSolSt4
D 1	1120	Dr SdBldSt1
D#1	1121	Dr SdBldSt2
E 1	1122	Dr SdBldSt3
F 1	1123	Dr SdBldSt4
F#1	1123	Dr SdBldSt4
G 1	1218	Dr SdFk1St
G#1	1218	Dr SdFk1St
A 1	1218	Dr SdFk1St
A#1	1219	Dr SdFk2St
B 1	1219	Dr SdFk2St
C 2	1220	Dr SdFk3St
C#2	1220	Dr SdFk3St
D 2	1271	Dr SdBl1St
D#2	1272	Dr SdBl2St
E 2	1272	Dr SdBl2St
F 2	1273	Dr SdBl3St
F#2	1273	Dr SdBl3St
G 2	1200	Dr SdNm1St
G#2	1201	Dr SdNm2St
A 2	1201	Dr SdNm2St
A#2	1202	Dr SdNm3St
B 2	1202	Dr SdNm3St
C 3	1203	Dr SdNm4St
C#3	1203	Dr SdNm4St
D 3	1318	Dr SdHip1St
D#3	1318	Dr SdHip1St
E 3	1318	Dr SdHip1St
F 3	1319	Dr SdHip2St
F#3	1319	Dr SdHip2St
G 3	1253	Dr SdSon1St
G#3	1254	Dr SdSon2St
A 3	1254	Dr SdSon2St
A#3	1255	Dr SdSon3St
B 3	1255	Dr SdSon3St
C 4	1256	Dr SdSon4St
C#4	1256	Dr SdSon4St
D 4	1236	Dr SdBs1St
D#4	1237	Dr SdBs2St
E 4	1237	Dr SdBs2St
F 4	1238	Dr SdBs3St
F#4	1238	Dr SdBs3St
G 4	1303	Dr SdTgt1St
G#4	1304	Dr SdTgt2St
A 4	1304	Dr SdTgt2St
A#4	1305	Dr SdTgt3St
B 4	1305	Dr SdTgt3St
C 5	1306	Dr SdTgt4St
C#5	1306	Dr SdTgt4St
D 5	1286	Dr SdBh1St
D#5	1287	Dr SdBh2St
E 5	1287	Dr SdBh2St
F 5	1288	Dr SdBh3St
F#5	1288	Dr SdBh3St
G 5	940	Pc HandClapSt
G#5	953	Pc ClapT9
A 5	954	Pc ClapAnSm
A#5	930	Pc Stick
B 5	931	Pc Stick2
C 6	1229	Dr SdFkAySt

PRE 57 Cuban

Нота	№ сигнала	Наименование сигнала
C 0		
C#0		
D 0		
D#0		
E 0		
F 0		
F#0		
G 0		
G#0		
A 0		
A#0	859	Pc CongaTip
B 0	860	Pc CongaBtm
C 1	857	Pc Conga Opn
C#1	857	Pc Conga Opn
D 1	858	Pc CongaOpSlp
D#1	858	Pc CongaOpSlp
E 1	858	Pc CongaOpSlp
F 1	859	Pc CongaTip
F#1	857	Pc Conga Opn
G 1	857	Pc Conga Opn
G#1	857	Pc Conga Opn
A 1	858	Pc CongaOpSlp
A#1	858	Pc CongaOpSlp
B 1	857	Pc Conga Opn
C 2	873	Pc Bongo H1
C#2	874	Pc Bongo H2
D 2	873	Pc Bongo H1
D#2	874	Pc Bongo H2
E 2	874	Pc Bongo H2
F 2	874	Pc Bongo H2
F#2	872	Pc Bongo L
G 2	872	Pc Bongo L
G#2	872	Pc Bongo L
A 2	864	Pc Quint2Opn
A#2	872	Pc Bongo L
B 2	863	Pc Quint1Slp
C 3	879	Pc TmbaleL1-3
C#3		
D 3		
D#3		
E 3		
F 3	885	Pc Paila L
F#3	875	Pc TmbaleH1-3
G 3		
G#3		
A 3		
A#3		
B 3	886	Pc Paila H
C 4	946	Pc Cowbell2
C#4		
D 4		
D#4		
E 4	926	Pc GuiroShort
F 4	925	Pc GuiroLong
F#4		
G 4		
G#4	912	Pc TambrnSw
A 4		
A#4		
B 4		
C 5	890	Pc Maracas1-2
C#5	901	Pc Shaker 3
D 5	893	Pc Cabasa1-2
D#5		
E 5		
F 5		
F#5		
G 5		
G#5		
A 5		
A#5		
B 5		
C 6		

PRE 58 SynPopKit

Нота	№ сигнала	Наименование сигнала
C 0	1111	Dr BdElClick
C#0	1103	Dr BdElec3
D 0	1101	Dr BdElec1
D#0	1109	Dr BdElFX2
E 0	1108	Dr BdElFX1
F 0	1110	Dr BdElGate
F#0	1113	Dr BdElPwr2
G 0	1102	Dr BdElec2
G#0	1105	Dr BdElComp1
A 0	1106	Dr BdElComp2
A#0	1107	Dr BdElComp3
B 0	1104	Dr BdElec4
C 1	1112	Dr BdElPwr1
C#1	1442	Dr SdT9Rim
D 1	1435	Dr SdElec12
D#1	953	Pc ClapT9
E 1	1431	Dr SdElec8
F 1	1659	Dr TomT9Lo
F#1	1597	Dr HHClT9
G 1	1659	Dr TomT9Lo
G#1	1598	Dr HHOpT9
A 1	1659	Dr TomT9Lo
A#1	1598	Dr HHOpT9
B 1	1658	Dr TomT9Hi
C 2	1658	Dr TomT9Hi
C#2	1710	Dr CrashT9
D 2	1658	Dr TomT9Hi
D#2	1713	Dr RideT9
E 2	1710	Dr CrashT9
F 2	1713	Dr RideT9
F#2	966	Pc ElTambrn2
G 2	1710	Dr CrashT9
G#2	961	Pc ElCowbell
A 2	1710	Dr CrashT9
A#2	965	Pc ElTambrn1
B 2	1713	Dr RideT9
C 3	802	Se ElPerc5
C#3	801	Se ElPerc4
D 3	809	Se ElPerc12
D#3	803	Se ElPerc6
E 3	798	Se ElPerc1
F 3	792	Se BellFX1
F#3	793	Se BellFX2
G 3	851	Se ScratchAtk
G#3	852	Se ScratchR&B
A 3	893	Pc Cabasa1-2
A#3	891	Pc MaracasSlr
B 3	811	Se ElPerc14
C 4	812	Se ElPerc15
C#4	799	Se ElPerc2
D 4	800	Se ElPerc3
D#4	804	Se ElPerc7
E 4	805	Se ElPerc8
F 4	806	Se ElPerc9
F#4	807	Se ElPerc10
G 4	810	Se ElPerc13
G#4	939	Pc TriangleMt
A 4	938	Pc TriangleOp
A#4	968	Pc ElMarcs
B 4	970	Pc ElTriangl
C 5	808	Se ElPerc11
C#5	1424	Dr SdElec1
D 5	1432	Dr SdElec9
D#5	1433	Dr SdElec10
E 5	1434	Dr SdElec11
F 5	1425	Dr SdElec2
F#5	1426	Dr SdElec3
G 5	1427	Dr SdElec4
G#5	1428	Dr SdElec5
A 5	1429	Dr SdElec6
A#5	1430	Dr SdElec7
B 5	955	Pc ElClap1
C 6	956	Pc ElClap2

PRE 59 Arabic Mix

Нота	№ сигнала	Наименование сигнала
C 0	952	Pc BellTree
C#0	1391	Dr SdBrMtSt
D 0	1397	Dr SdBrSwrSt
D#0	1394	Dr SdBrMt2St
E 0	1400	Dr SdBSwrAtSt
F 0	1387	Dr SdLvRolSt
F#0	932	Pc Castanet
G 0	1200	Dr SdNm1St
G#0	930	Pc Stick
A 0	1055	Dr BdT9-2
A#0	1232	Dr SdBsSt1-3
B 0	1017	Dr BdHiSt
C 1	999	Dr BdNmSt1-2
C#1	1214	Dr SdFkSt1-3
D 1	1114	Dr SdBldSt1-4
D#1	940	Pc HandClapSt
E 1	1134	Dr SdSolSt1-4
F 1	1648	Dr TomRkLoSt
F#1	1498	Dr HHClS1-4St
G 1	1644	Dr TomRkMdSt
G#1	1518	Dr HHPdl1-3St
A 1	1636	Dr TomFlr St
A#1	1534	Dr HHOpn1-2St
B 1	1632	Dr TomLow St
C 2	1628	Dr TomMid St
C#2	1670	Dr CrashSt
D 2	1624	Dr TomHi St
D#2	1534	Dr HHOpn1-2St
E 2	1714	Dr RevCymbal
F 2	879	Pc TmbaleL1-3
F#2	857	Pc Conga Opn
G 2	875	Pc TmbaleH1-3
G#2	858	Pc CongaOpSlp
A 2	912	Pc TambrnSw
A#2	866	Pc TumbaOpen
B 2	945	Pc Cowbell1
C 3	933	Pc Clave
C#3	873	Pc Bongo H1
D 3	934	Pc WoodBlock
D#3	872	Pc Bongo L
E 3	934	Pc WoodBlock
F 3	522	Pc Dohol L
F#3	893	Pc Cabasa1-2
G 3	523	Pc Dohol H
G#3	899	Pc Shaker 1
A 3	932	Pc Castanet
A#3	890	Pc Maracas1-2
B 3	932	Pc Castanet
C 4	531	Pc Twaisat3
C#4	529	Pc Twaisat
D 4	530	Pc Twaisat2
D#4	532	Pc Twaisat4
E 4	532	Pc Twaisat4
F 4	503	Pc SmlTablDom
F#4	524	Pc BarasimDom
G 4	504	Pc SmlTablSnp
G#4	525	Pc BarasimSak
A 4	505	Pc SmlTablSak
A#4	526	Pc BarasimTak
B 4	506	Pc SmlTablTak
C 5	507	Pc BigTablDom
C#5	527	Pc Segal Dom
D 5	508	Pc BigTablTak
D#5	528	Pc Segal Tak
E 5	509	Pc BigTablSak
F 5	510	Pc TablaDom
F#5	511	Pc TablaTak1
G 5	517	Pc TablaTrem
G#5	512	Pc TablaTak2
A 5	513	Pc TablaTik1
A#5	516	Pc TablaSak1
B 5	515	Pc TablaTik3
C 6	514	Pc TablaTik2

PRE 60 Bellydance

Нота	№ сигнала	Наименование сигнала
C 0	514	Pc TablaTik2
C#0	494	Pc Wataiko
D 0	495	Pc DjembeEd
D#0	496	Pc DjembeMt
E 0	497	Pc DjembeOp
F 0	498	Pc DjembeCmb
F#0	499	Pc TablaBya
G 0	500	Pc TablaNah
G#0	501	Pc TablaMut
A 0	502	Pc TablaCmb
A#0	503	Pc SmlTablDom
B 0	503	Pc SmlTablDom
C 1	1095	Dr BdHardLong
C#1	1054	Dr BdT9-1
D 1	1437	Dr SdT9-2
D#1	955	Pc ElClap1
E 1	1164	Dr SdPwrL1-4
F 1	1665	Dr TomDistLo
F#1	1597	Dr HHClT9
G 1	1664	Dr TomDistHi
G#1	1599	Dr HHClT8-1
A 1	1661	Dr TomSyn1
A#1	1598	Dr HHOpT9
B 1	1662	Dr TomSyn2
C 2	1466	Dr SdHip1
C#2	1675	Dr Crash2
D 2	1462	Dr SdD&B4
D#2	1606	Dr HHClBreak
E 2	1714	Dr RevCymbal
F 2	879	Pc TmbaleL1-3
F#2	857	Pc Conga Opn
G 2	875	Pc TmbaleH1-3
G#2	858	Pc CongaOpSlp
A 2	912	Pc TambrnSw
A#2	866	Pc TumbaOpen
B 2	945	Pc Cowbell1
C 3	933	Pc Clave
C#3	873	Pc Bongo H1
D 3	934	Pc WoodBlock
D#3	872	Pc Bongo L
E 3	934	Pc WoodBlock
F 3	522	Pc Dohol L
F#3	893	Pc Cabasa1-2
G 3	523	Pc Dohol H
G#3	899	Pc Shaker 1
A 3	932	Pc Castanet
A#3	890	Pc Maracas1-2
B 3	932	Pc Castanet
C 4	531	Pc Twaisat3
C#4	529	Pc Twaisat
D 4	530	Pc Twaisat2
D#4	532	Pc Twaisat4
E 4	532	Pc Twaisat4
F 4	503	Pc SmlTablDom
F#4	524	Pc BarasimDom
G 4	504	Pc SmlTablSnp
G#4	525	Pc BarasimSak
A 4	505	Pc SmlTablSak
A#4	526	Pc BarasimTak
B 4	506	Pc SmlTablTak
C 5	507	Pc BigTablDom
C#5	527	Pc Segal Dom
D 5	508	Pc BigTablTak
D#5	528	Pc Segal Tak
E 5	509	Pc BigTablSak
F 5	510	Pc TablaDom
F#5	511	Pc TablaTak1
G 5	517	Pc TablaTrem
G#5	512	Pc TablaTak2
A 5	513	Pc TablaTik1
A#5	516	Pc TablaSak1
B 5	515	Pc TablaTik3
C 6	514	Pc TablaTik2

PRE 61 DanceSnare

Нота	№ сигнала	Наименование сигнала
C 0	1480	Dr SdFx1
C#0	1481	Dr SdFx2
D 0	1482	Dr SdFx3
D#0	1483	Dr SdFx4
E 0	1485	Dr SdDist
F 0	1486	Dr SdCut
F#0	1487	Dr SdDodgH
G 0	1488	Dr SdDodgL
G#0	1489	Dr SdFM
A 0	1491	Dr SdSyn
A#0	1495	Dr SdHammr
B 0	1496	Dr SdLofi
C 1	1436	Dr SdT9-1
C#1	1437	Dr SdT9-2
D 1	1438	Dr SdT9-3
D#1	1439	Dr SdT9-4
E 1	1440	Dr SdT9-5
F 1	1441	Dr SdT9Gate
F#1	1443	Dr SdT8-1
G 1	1444	Dr SdT8-2
G#1	1445	Dr SdT8-3
A 1	1446	Dr SdT8-4
A#1	1447	Dr SdT8-5
B 1	1449	Dr SdAnSm
C 2	1451	Dr SdAnCR
C#2	1453	Dr SdHuman1
D 2	1455	Dr SdJngl1
D#2	1456	Dr SdJngl2
E 2	1457	Dr SdJngl3
F 2	1458	Dr SdJnglFx
F#2	1459	Dr SdD&B1
G 2	1460	Dr SdD&B2
G#2	1461	Dr SdD&B3
A 2	1462	Dr SdD&B4
A#2	1463	Dr SdR&B1
B 2	1464	Dr SdR&B1Rm
C 3	1465	Dr SdR&B2
C#3	1466	Dr SdHip1
D 3	1467	Dr SdHip2
D#3	1468	Dr SdHip3
E 3	1469	Dr SdHipGate
F 3	1470	Dr SdHipRm1
F#3	1471	Dr SdHipRm2
G 3	1472	Dr SdHipRm3
G#3	1473	Dr SdHipRm4
A 3	1474	Dr SdHipRm5
A#3	1476	Dr SdBreak2
B 3	1478	Dr SdBreakHvy
C 4	1424	Dr SdElec1
C#4	1425	Dr SdElec2
D 4	1426	Dr SdElec3
D#4	1427	Dr SdElec4
E 4	1428	Dr SdElec5
F 4	1429	Dr SdElec6
F#4	1430	Dr SdElec7
G 4	1431	Dr SdElec8
G#4	1432	Dr SdElec9
A 4	1433	Dr SdElec10
A#4	1434	Dr SdElec11
B 4	1435	Dr SdElec12
C 5	1424	Dr SdElec1
C#5	1444	Dr SdT8-2
D 5	1426	Dr SdElec3
D#5	1427	Dr SdElec4
E 5	1428	Dr SdElec5
F 5	1429	Dr SdElec6
F#5	1430	Dr SdElec7
G 5	1424	Dr SdElec1
G#5	1431	Dr SdElec8
A 5	1433	Dr SdElec10
A#5	1434	Dr SdElec11
B 5	1435	Dr SdElec12
C 6	1438	Dr SdT9-3

PRE 62 SpecialSFX

Нота	№ сигнала	Наименование сигнала
C 0	625	Wv MiniBlip2
C#0	624	Wv MiniBlip1
D 0	626	Wv MiniBlip3
D#0	627	Wv MiniBlip4
E 0	628	Wv MiniBlip5
F 0	629	Wv MiniBlip6
F#0	792	Se BellFX1
G 0	793	Se BellFX2
G#0	801	Se ElPerc4
A 0	803	Se ElPerc6
A#0	812	Se ElPerc15
B 0	802	Se ElPerc5
C 1	799	Se ElPerc2
C#1	800	Se ElPerc3
D 1	804	Se ElPerc7
D#1	805	Se ElPerc8
E 1	806	Se ElPerc9
F 1	807	Se ElPerc10
F#1	811	Se ElPerc14
G 1	810	Se ElPerc13
G#1	800	Se ElPerc3
A 1	701	Wv Spectrum1
A#1	703	Wv Spectrum3
B 1	702	Wv Spectrum2
C 2	783	Me Shower St
C#2	786	Me ComputerSt
D 2	789	Me Chatter
D#2	779	Me EngnRoomSt
E 2	777	Me Raspberry
F 2	782	Me DigiHeli
F#2	763	Me HopFX1
G 2	710	Me Willow St
G#2	713	Me Anemone St
A 2	716	Me MagnitudSt
A#2	753	Me RadioNz
B 2	761	Me Quiek
C 3	770	Me StabGiant
C#3	769	Me StabOrch
D 3	771	Me StabHard
D#3	772	Me StabOrgan2
E 3	773	Me StabAah
F 3	774	Me Hit Uhh
F#3	775	Me HitOrch2
G 3	767	Me HitOrch1
G#3	768	Me HitBrass
A 3	724	Me OrchHit1St
A#3	727	Me OrchHit2St
B 3	730	Me OrchHit3
C 4	265	Gt PlayFx Mix
C#4	265	Gt PlayFx Mix
D 4	265	Gt PlayFx Mix
D#4	1834	Se Ab FX07
E 4	1835	Se Ab FX08
F 4	1836	Se Ab FX09
F#4	834	Se Scratch H
G 4	835	Se Scratch L
G#4	836	Se ScratchDwn
A 4	837	Se ScratchHiF
A#4	847	Se ScratchStp
B 4	848	Se ScratchSpn
C 5	790	Se Ripper
C#5	795	Se NzBurst
D 5	796	Se Zap1
D#5	797	Se Zap2
E 5	813	Se HiQ1
F 5	814	Se HiQ2
F#5	816	Se Bomb
G 5	819	Se FxGun1
G#5	739	Me Electer
A 5	740	Me HH Hit
A#5	576	Wv PWMfast
B 5	619	Wv FMBass2
C 6	633	Wv FMMetal2

PRE 63 Synthetic

Нота	№ сигнала	Наименование сигнала
C 0	1102	Dr BdElec2
C#0	847	Se ScratchStp
D 0	1398	Dr SdBrSwrL
D#0	1396	Dr SdBrMt2R
E 0	1397	Dr SdBrSwrSt
F 0	1390	Dr SdRollMono
F#0	623	Wv FMBass6
G 0	826	Se Seashore
G#0	801	Se ElPerc4
A 0	1107	Dr BdElComp3
A#0	1171	Dr SdPwrR2
B 0	1102	Dr BdElec2
C 1	1100	Dr BdSlimy
C#1	883	Pc TmblPailaH
D 1	1347	Dr SdPicol
D#1	954	Pc ClapAnSm
E 1	1433	Dr SdSon3L
F 1	607	Wv MgBass2
F#1	814	Se HiQ2
G 1	607	Wv MgBass2
G#1	804	Se ElPerc7
A 1	1660	Dr TomT8
A#1	1602	Dr HHOpT8-2
B 1	1660	Dr TomT8
C 2	1660	Dr TomT8
C#2	1674	Dr Crash
D 2	1660	Dr TomT8
D#2	1699	Dr CupMono
E 2	1699	Dr CupMono
F 2	1699	Dr CupMono
F#2	843	Se ScratchSdF
G 2	1693	Dr RideCup RL
G#2	804	Se ElPerc7
A 2	1674	Dr Crash
A#2	745	Me HiLo
B 2	1705	Dr China
C 3	572	Wv RingMod
C#3	805	Se ElPerc8
D 3	572	Wv RingMod
D#3	804	Se ElPerc7
E 3	808	Se ElPerc11
F 3	886	Pc Paila H
F#3	886	Pc Paila H
G 3	763	Me HopFX1
G#3	764	Me HopFX2
A 3	834	Se Scratch H
A#3	837	Se ScratchHiF
B 3	797	Se Zap2
C 4	762	Me LfoSeq
C#4	762	Me LfoSeq
D 4	593	Wv MiniBa3
D#4	761	Me Quiek
E 4	778	Me DigiBreath
F 4	782	Me DigiHeli
F#4	804	Se ElPerc7
G 4	634	Wv FMOrgan1
G#4	536	Pc TibetnBowl
A 4	536	Pc TibetnBowl
A#4	527	Pc Segal Dom
B 4	781	Me EngnRoom R
C 5	805	Se ElPerc8
C#5	195	Gt StlSld St
D 5	625	Wv MiniBlip2
D#5	702	Wv Spectrum2
E 5	628	Wv MiniBlip5
F 5	705	Wv Noise
F#5	1073	Dr BdD&B1
G 5	702	Wv Spectrum2
G#5	719	Me SabreTone
A 5	811	Se ElPerc14
A#5	805	Se ElPerc8
B 5	782	Me DigiHeli
C 6	952	Pc BellTree

PRE 64 SFX Kit

Нота	№ сигнала	Наименование сигнала
C 0	559	Wv FatSawMn
C#0	851	Se ScratchAtk
D 0	702	Wv Spectrum2
D#0	585	Wv 3o3Saw2
E 0	821	Se TurnTable
F 0	1390	Dr SdRollMono
F#0	623	Wv FMBass6
G 0	817	Se TapeRewnd
G#0	802	Se ElPerc5
A 0	1106	Dr BdElComp2
A#0	1194	Dr SdNmSt1-4
B 0	1100	Dr BdSlimy
C 1	1102	Dr BdElec2
C#1	593	Wv MiniBa3
D 1	1282	Dr SdBhSt1-3
D#1	586	Wv 3o3Squ
E 1	1263	Dr SdSon3L
F 1	1664	Dr TomDistHi
F#1	782	Me DigiHeli
G 1	1664	Dr TomDistHi
G#1	799	Se ElPerc2
A 1	1664	Dr TomDistHi
A#1	1602	Dr HHOpT8-2
B 1	1664	Dr TomDistHi
C 2	1664	Dr TomDistHi
C#2	1674	Dr Crash
D 2	1664	Dr TomDistHi
D#2	1692	Dr RideCup R
E 2	1689	Dr RideRL
F 2	1700	Dr CupMono2
F#2	837	Se ScratchHiF
G 2	1707	Dr SplashL
G#2	591	Wv MiniBa1
A 2	1666	Dr CrashCymSt
A#2	779	Me EngnRoomSt
B 2	1693	Dr RideCup RL
C 3	573	Wv SyncLFO
C#3	579	Wv P5SawLp
D 3	565	Wv OBStrings
D#3	1195	Dr SdNmSt1-3
E 3	808	Se ElPerc11
F 3	577	Wv PWMslow
F#3	762	Me LfoSeq
G 3	735	Me BigSyn
G#3	735	Me BigSyn
A 3	775	Me HitOrch2
A#3	503	Pc SmlTablDom
B 3	655	Wv Digi03
C 4	655	Wv Digi03
C#4	653	Wv Digi01
D 4	653	Wv Digi01
D#4	765	Me Sonar1
E 4	771	Me StabHard
F 4	779	Me EngnRoomSt
F#4	789	Me Chatter
G 4	756	Me Hoo
G#4	534	Pc Mondira
A 4	534	Pc Mondira
A#4	163	Or Rotar
B 4	777	Me Raspberry
C 5	782	Me DigiHeli
C#5	586	Wv 3o3Squ
D 5	764	Me HopFX2
D#5	696	Wv DigiBell3
E 5	815	Se VoxHitRev
F 5	813	Se HiQ1
F#5	817	Se TapeRewnd
G 5	818	Se FxGun2
G#5	819	Se FxGun1
A 5	820	Se Thunder
A#5	822	Se Police
B 5	816	Se Bomb
C 6	816	Se Bomb

GM Drum Stereo GM

Нота	№ сигнала	Наименование сигнала
C 0	933	Pc Clave
C#0	1391	Dr SdBrMtSt
D 0	1397	Dr SdBrSwrSt
D#0	1394	Dr SdBrMt2St
E 0	1400	Dr SdBSwrAtSt
F 0	1387	Dr SdLvRolSt
F#0	932	Pc Castanet
G 0	1200	Dr SdNm1St
G#0	930	Pc Stick
A 0	1008	Dr BdFkSt1-2
A#0	1234	Dr SdBsSt2-3
B 0	1017	Dr BdHiSt
C 1	999	Dr BdNmSt1-2
C#1	1376	Dr SdClRmSt
D 1	1194	Dr SdNmSt1-4
D#1	953	Pc ClapT9
E 1	1233	Dr SdBsSt1-2
F 1	1636	Dr TomFlr St
F#1	1498	Dr HHCls1-4St
G 1	1632	Dr TomLow St
G#1	1521	Dr HHPdl3 St
A 1	1632	Dr TomLow St
A#1	1536	Dr HHOpn2 St
B 1	1628	Dr TomMid St
C 2	1628	Dr TomMid St
C#2	1670	Dr CrashSt
D 2	1624	Dr TomHi St
D#2	1682	Dr RideCym St
E 2	1701	Dr ChinaSt
F 2	1690	Dr RideCup St
F#2	912	Pc TambrnSw
G 2	1706	Dr SplashSt
G#2	946	Pc Cowbell2
A 2	1673	Dr CrashRL
A#2	935	Pc Vibraslap
B 2	1685	Dr RideCym RL
C 3	873	Pc Bongo H1
C#3	872	Pc Bongo L
D 3	859	Pc CongaTip
D#3	857	Pc Conga Opn
E 3	866	Pc TumbaOpen
F 3	875	Pc TmbaleH1-3
F#3	879	Pc TmbaleL1-3
G 3	922	Pc AgogoHi
G#3	923	Pc AgogoLo
A 3	893	Pc Cabasa1-2
A#3	891	Pc MaracasSlr
B 3	936	Pc Whistle
C 4	936	Pc Whistle
C#4	926	Pc GuiroShort
D 4	925	Pc GuiroLong
D#4	933	Pc Clave
E 4	934	Pc WoodBlock
F 4	934	Pc WoodBlock
F#4	871	Pc CuicaHi
G 4	870	Pc CuicaLo
G#4	939	Pc TriangleMt
A 4	938	Pc TriangleOp
A#4	899	Pc Shaker 1
B 4	951	Pc SleighBel
C 5	952	Pc BellTree
C#5	1274	Dr SdBIL1-3
D 5	1297	Dr SdTgtSt1-4
D#5	1290	Dr SdBhR1-3
E 5	1317	Dr SdHipSt1-2
F 5	1020	Dr BdLoSt
F#5	1355	Dr SdLdwHMono
G 5	1075	Dr BdR&B1
G#5	1358	Dr SdHeavy
A 5	1043	Dr BdRoom1
A#5	1352	Dr SdAmb
B 5	1029	Dr BdFkSonSt
C 6	1044	Dr BdRoom2

№	Категория	Наименование	№	Категория	Наименование	№	Категория	Наименование	№	Категория	Наименование	№	Категория	Наименование	№	Категория	Наименование	№	Категория	Наименование
1	Ap	GrndStSw1	101	Cp	StoneH	201	Gt	StlMute St	301	Ba	Fing Sw	401	Br	Trumpet2M	501	Pc	TablaMut	601	Wv	KlickBass
2	Ap	GrndStSw2	102	Cp	StoneS	202	Gt	StlMute L	302	Ba	Fing M+	402	Br	Trumpet2H	502	Pc	TablaCmb	602	Wv	PulsBass
3	Ap	GrndStS	103	Cp	WoodBell1	203	Gt	StlMute R	303	Ba	Fing H+	403	Br	TrmptMute	503	Pc	SmlTablDom	603	Wv	ShortUni
4	Ap	GrndStM	104	Cp	WoodBell2	204	Gt	StlDead St	304	Ba	Fing M-	404	Br	PicolTrmpt	504	Pc	SmlTablSnp	604	Wv	NoiseBass
5	Ap	GrndStH	105	Cp	TimpStSw	205	Gt	StlDead L	305	Ba	Fing H-	405	Br	Trombone	505	Pc	SmlTablSak	605	Wv	MgRamp
6	Ap	GrndMnSw1	106	Cp	TimpStSft	206	Gt	StlDead R	306	Ba	Fing Dead	406	Br	Trombone-	506	Pc	SmlTablTak	606	Wv	MgBass1
7	Ap	GrndMnSw2	107	Cp	TimpStHrd	207	Gt	StlFx St	307	Ba	PrecRW M	407	Br	Trombone2	507	Pc	BigTablDom	607	Wv	MgBass2
8	Ap	GrndMnS	108	Cp	TimpSw L	208	Gt	StlFx L	308	Ba	PrecRW H	408	Br	SoftTrb	508	Pc	BigTablTak	608	Wv	MgBass3
9	Ap	GrndMnM	109	Cp	TimpSft L	209	Gt	StlFx R	309	Ba	PrecRW M+	409	Br	SoftFlugel	509	Pc	BigTablSak	609	Wv	ModBass
10	Ap	GrndMnH	110	Cp	TimpHrd L	210	Gt	StlSw St	310	Ba	PrecRW H+	410	Br	SoftFlugl-	510	Pc	TablaDom	610	Wv	AnaBass1
11	Ap	GrndStSw1+	111	Cp	TimpSw R	211	Gt	StlSw Mn	311	Ba	PrecRW M-	411	Br	FlugelHorn	511	Pc	TablaTak1	611	Wv	AnaBass2
12	Ap	GrndStSw2+	112	Cp	TimpSft R	212	Gt	StlHmHmSt	312	Ba	PrecRW H-	412	Br	FrncHrn St	512	Pc	TablaTak2	612	Wv	UniBass
13	Ap	GrndStS+	113	Cp	TimpHrd R	213	Gt	StlHmHmMn	313	Ba	PrecFW	413	Br	FrncHrn L	513	Pc	TablaTik1	613	Wv	AnaBass3
14	Ap	GrndStM+	114	Or	RockVb	214	Gt	StlMtDdSt	314	Ba	PrecFW+	414	Br	FrncHrn R	514	Pc	TablaTik2	614	Wv	AnaBass4
15	Ap	GrndStH+	115	Or	RockPc	215	Gt	StlMtDdMn	315	Ba	PrecFW-	415	Br	FrncHrnSt+	515	Pc	TablaTik3	615	Wv	AnaBass5
16	Ap	GrndMnSw1+	116	Or	Click	216	Gt	StlFxSdHrm	316	Ba	Slap	416	Br	FrncHrn L+	516	Pc	TablaSak1	616	Wv	AnaBass6
17	Ap	GrndMnSw2+	117	Or	Rock2	217	Gt	StlFxSwHmr	317	Ba	Slap2	417	Br	FrncHrn R+	517	Pc	TablaTrem	617	Wv	T8KickBass
18	Ap	GrndMnS+	118	Or	Rock2+	218	Gt	StlFxMtHmr	318	Ba	SlapHarmo	418	Br	FrncHrnSt-	518	Pc	UdoFinger	618	Wv	FMBass1
19	Ap	GrndMnM+	119	Or	Rock2-	219	Gt	StlFxDdHmr	319	Ba	Frtls	419	Br	FrncHrn L-	519	Pc	Udo Hi	619	Wv	FMBass2
20	Ap	GrndMnH+	120	Or	JazzPrc	220	Gt	StlDdMtHmr	320	Ba	Frtls Hrm	420	Br	FrncHrn R-	520	Pc	Udo Low	620	Wv	FMBass3
21	Ap	GrndStSw1-	121	Or	JazzPrc-	221	Gt	HiStr S St	321	Ba	Frtls-DdFX	421	Br	FrncHrSol	521	Pc	UduCombi	621	Wv	FMBass4
22	Ap	GrndStSw2-	122	Or	Jazz	222	Gt	HiStr S L	322	Ba	Frtls+	422	Br	FrncHrSol+	522	Pc	Dohol L	622	Wv	FMBass5
23	Ap	GrndStS-	123	Or	Jazz+	223	Gt	HiStr S R	323	Ba	Frtls-	423	Br	FrncHrSol-	523	Pc	Dohol H	623	Wv	FMBass6
24	Ap	GrndStM-	124	Or	Jazz-	224	Gt	HiStr H St	324	Ba	Frtls Dead	424	Br	Tuba	524	Pc	BarasimDom	624	Wv	MiniBlip1
25	Ap	GrndStH-	125	Or	Full	225	Gt	HiStr H L	325	Ba	EBassFX	425	Rd	Soprano	525	Pc	BarasimSak	625	Wv	MiniBlip2
26	Ap	GrndMnSw1-	126	Or	Full+	226	Gt	HiStr H R	326	St	ViolnStrt	426	Rd	Soprano2	526	Pc	BarasimTak	626	Wv	MiniBlip3
27	Ap	GrndMnSw2-	127	Or	Full-	227	Gt	HiStrFXSt	327	St	ViolnStrt+	427	Rd	Alto	527	Pc	Segal Dom	627	Wv	MiniBlip4
28	Ap	GrndMnS-	128	Or	Swish	228	Gt	HiStrFX L	328	St	ViolnStrt-	428	Rd	Alto2	528	Pc	Segal Tak	628	Wv	MiniBlip5
29	Ap	GrndMnM-	129	Or	Swish-	229	Gt	HiStrFX R	329	St	ViolinVb	429	Rd	AltoSaxVb	529	Pc	Twaisat	629	Wv	MiniBlip6
30	Ap	GrndMnH-	130	Or	Compact	230	Gt	HiStr FX2	330	St	ViolinVb+	430	Rd	Tenor	530	Pc	Twaisat2	630	Wv	FMSquare
31	Ap	Brite Pno	131	Or	Compact-	231	Gt	ClnOpenM	331	St	ViolinVb-	431	Rd	Tenor2	531	Pc	Twaisat3	631	Wv	FMShaper
32	Ap	Brite Pno-	132	Or	Portable	232	Gt	ClnOpenH	332	St	ViolinVb2	432	Rd	Baritone	532	Pc	Twaisat4	632	Wv	FMMetal1
33	Ap	CP80	133	Or	Portable-	233	Gt	ClnHmmr	333	St	ViolinVb2+	433	Rd	Clarinet	533	Pc	LamaCym	633	Wv	FMMetal2
34	Ap	CP80+	134	Or	BowNv	234	Gt	ClnSlap	334	St	ViolinVb2-	434	Rd	Clarinet2	534	Pc	Mondira	634	Wv	FMOrgan1
35	Ap	CP80-	135	Or	BowVb	235	Gt	ClnSlide	335	St	ViolaVb	435	Rd	Oboe	535	Pc	TibetanBel	635	Wv	FMOrgan2
36	Ep	EP1 Soft	136	Or	Gospel	236	Gt	ClnHarmo	336	St	ViolaVb+	436	Rd	OboeVb	536	Pc	TibetnBowl	636	Wv	FMOrgan3
37	Ep	EP1 Soft+	137	Or	Soul	237	Gt	ClnMute	337	St	ViolaVb-	437	Rd	EngHorn1	537	Pc	Ghunghuru	637	Wv	FMOrgan4
38	Ep	EP1 Soft-	138	Or	1stFour	238	Gt	ClnDead	338	St	ViolaVb2	438	Rd	EngHorn2	538	Vo	HahChoirSt	638	Wv	DarkOrgan
39	Ep	EP1 Med	139	Or	Draw 16'	239	Gt	ClnFX	339	St	ViolaVb2+	439	Rd	Bassoon1	539	Vo	HahChoir L	639	Wv	FMFunk
40	Ep	EP1 Med+	140	Or	Draw 5 1/3	240	Gt	ClnSwSlpFX	340	St	ViolaVb2-	440	Rd	Bassoon2	540	Vo	HahChoir R	640	Wv	FMGuitar
41	Ep	EP1 Med-	141	Or	Draw 8'	241	Gt	ClnHmrHrm	341	St	CelloVb	441	Rd	Bagpipe1	541	Vo	OohChoirSt	641	Wv	FSBuzz
42	Ep	EP1 Hard	142	Or	Draw 4'	242	Gt	ClnMutDed	342	St	CelloVb+	442	Rd	Bagpipe2	542	Vo	OohChoir L	642	Wv	WetPluck
43	Ep	EP1 Hard+	143	Or	Draw 2 2/3	243	Gt	ClnFxSdHrm	343	St	CelloVb-	443	Rd	SaxBreath	543	Vo	OohChoir R	643	Wv	Lately-S
44	Ep	EP1 Hard-	144	Or	Draw 2'	244	Gt	ClFxSwSlHm	344	St	CelloVb2	444	Rd	Harmonica	544	Vo	Ooh St	644	Wv	Lately-L
45	Ep	EP2 Soft1	145	Or	Draw 1 3/5	245	Gt	ClnFxSwHmr	345	St	CelloVb2+	445	Rd	ChrmtcHarp	545	Vo	Ooh L	645	Wv	P10-1
46	Ep	EP2 Soft1+	146	Or	Draw 1 1/3	246	Gt	ClnFxMtHmr	346	St	CelloVb2-	446	Rd	BluesHarp	546	Vo	Ooh R	646	Wv	P10-2
47	Ep	EP2 Soft1-	147	Or	Draw 1'	247	Gt	ClnFxDdHmr	347	St	Contrabass	447	Pi	Flute	547	Vo	ChoBreathL	647	Wv	P10-3
48	Ep	EP2 Soft2	148	Or	Draw 1+3	248	Gt	ClnDdMtHmr	348	St	Contrabas+	448	Pi	FluteVb	548	Vo	ChoBreathR	648	Wv	P25-1
49	Ep	EP2 Soft2+	149	Or	Draw 1+3+	249	Gt	Jazz Gtr	349	St	Contrabas-	449	Pi	FluteVbAtk	549	Vo	ChoOohLPSt	649	Wv	P25-2
50	Ep	EP2 Soft2-	150	Or	Draw 1+3-	250	Gt	VintAmpA	350	St	SoloVbCmb	450	Pi	Piccolo	550	Vo	ChoOohLPL	650	Wv	P50-1
51	Ep	EP2 Hard1	151	Or	Draw 2+4	251	Gt	VintAmpB	351	St	SoloVbCmb+	451	Pi	PanFlute	551	Vo	ChoOohLPR	651	Wv	P50-2
52	Ep	EP2 Hard1+	152	Or	Draw 2+4+	252	Gt	Front	352	St	SoloVbCmb-	452	Pi	PanFlute-	552	Vo	SynVox	652	Wv	TriWv
53	Ep	EP2 Hard1-	153	Or	Draw 2+4-	253	Gt	HmBckrM	353	St	SoloVbCmb2	453	Pi	IrishPipe	553	Vo	VoxNoiz	653	Wv	Digi01
54	Ep	EP2 Hard2	154	Or	Draw Even	254	Gt	HmBckrH	354	St	SoloVbCm2+	454	Pi	Shakuhachi	554	Vo	Itopia	654	Wv	Digi02
55	Ep	EP2 Hard2+	155	Or	Draw Even+	255	Gt	Dist Open	355	St	SoloVbCm2-	455	Pi	Recorder	555	Wv	PWMStrg St	655	Wv	Digi03
56	Ep	EP2 Hard2-	156	Or	Draw Even-	256	Gt	Dist Harmo	356	St	SoloSpcCmb	456	Pi	Bottle	556	Wv	PWMStrg Mn	656	Wv	Digi04
57	Ep	EP3 Soft1	157	Or	Draw Odd	257	Gt	Dist Mute	357	St	SoloSpCmb+	457	Pi	Ocarina	557	Wv	LongSaw	657	Wv	Digi05
58	Ep	EP3 Soft1+	158	Or	Draw Odd+	258	Gt	Ovrdrv Opn	358	St	SoloSpCmb-	458	Pi	Whistle	558	Wv	FatSaw St	658	Wv	Digi06
59	Ep	EP3 Soft1-	159	Or	Draw Odd-	259	Gt	Ovrdrv Mut	359	St	Pizz1 St	459	Pi	BreathO.S.	559	Wv	FatSawMn	659	Wv	Digi07
60	Ep	EP3 Soft2	160	Or	Perc	260	Gt	Dist FX	360	St	Pizz1 Mn	460	Pi	Didgerido1	560	Wv	FatSawMn-	660	Wv	Digi08
61	Ep	EP3 Soft2+	161	Or	Perc+	261	Gt	Dist/OvrFX	361	St	Pizz2	461	Pi	Didgerido2	561	Wv	OBModSaw	661	Wv	Digi09
62	Ep	EP3 Soft2-	162	Or	Perc-	262	Gt	FeedBack	362	St	Pizz3	462	Pi	Didgerido3	562	Wv	VPStrngSt	662	Wv	Digi10
63	Ep	EP3 Hard1	163	Or	Rotar	263	Gt	PwrChrdSt	363	St	PopPizz	463	Pi	DidgCmb1	563	Wv	VPStrngL	663	Wv	Digi11
64	Ep	EP3 Hard1+	164	Or	Clack	264	Gt	PwrChdMono	364	St	EnsMix	464	Pi	DidgCmb2	564	Wv	VPStrngR	664	Wv	Digi12
65	Ep	EP3 Hard1-	165	Or	RotarWhstl	265	Gt	PlayFx Mix	365	St	EnsMixSt	465	Pi	Sho	565	Wv	OBStrings	665	Wv	Bel1Wv
66	Ep	EP3 Hard2	166	Or	RotarGrit	266	Gt	PChdSt&Fx	366	St	EnsMixL	466	Pi	Shanai	566	Wv	SyzleStrng	666	Wv	Bel2Wv
67	Ep	EP3 Hard2+	167	Or	RotarGrit2	267	Gt	PChd&Fx	367	St	EnsMixR	467	Pi	Ney	567	Wv	Padd	667	Wv	DigiVox1
68	Ep	EP3 Hard2-	168	Or	SftTmp	268	Gt	Banjo	368	St	EnsMute	468	Pi	Kaval	568	Wv	Darklight	668	Wv	DigiVox2
69	Ep	Wurli	169	Or	Pipe1St	269	Ba	Aco M	369	St	EnsMute-	469	St	Keman	569	Wv	OBBrass	669	Wv	DigiVox3
70	Ep	Wurli+	170	Or	Pipe1L	270	Ba	Aco H	370	St	EnsMuteSt	470	Gt	Sitar	570	Wv	Trance St	670	Wv	DigiVox4
71	Ep	Wurli-	171	Or	Pipe1R	271	Ba	Aco Harmo	371	St	HardEnsSt	471	Gt	SitarWv1	571	Wv	Trance Mn	671	Wv	DigiVox5
72	Ep	DX1	172	Or	Pipe2	272	Ba	Aco Dead	372	St	HardEnsSt+	472	Gt	SitarWv2	572	Wv	RingMod	672	Wv	VoxG2
73	Ep	DX2	173	Or	Pipe3St	273	Ba	Aco FX	373	St	HardEnsSt-	473	Gt	SitarWv3	573	Wv	SyncLFO	673	Wv	VoxE3
74	Ep	DX3	174	Or	Pipe3L	274	Ba	Aco FX2	374	St	HardEnsL	474	Gt	SitarWv4	574	Wv	Sync	674	Wv	DigiEb
75	Ep	DX4	175	Or	Pipe3R	275	Ba	Aco Ded FX	375	St	HardEnsL+	475	Gt	SitarWv5	575	Wv	SyncLd	675	Wv	DigiEg
76	Ep	DX5	176	Or	Pipe4	276	Ba	Aco Sw	376	St	HardEnsL-	476	Gt	SitarWv6	576	Wv	PWMfast	676	Wv	DigiBow1
77	Kb	Clav1	177	Or	Pipe5	277	Ba	Aco M+	377	St	HardEnsR	477	Gt	Tambura	577	Wv	PWMslow	677	Wv	DigiBow2
78	Kb	Clav1+	178	Or	Accordion	278	Ba	Aco H+	378	St	HardEnsR+	478	Gt	TamburaWv1	578	Wv	CS80Brass	678	Wv	DigiOsc1
79	Kb	Clav1-	179	Or	TangoAcd	279	Ba	Aco M-	379	St	HardEnsR-	479	Gt	TamburaWv2	579	Wv	P5SawLp	679	Wv	DigiOsc2
80	Kb	Clav2	180	Gt	Nylon St	280	Ba	Aco H-	380	St	EnsMxLPSt	480	Gt	TamburaWv3	580	Wv	P5SawAtk	680	Wv	DigiOsc3
81	Kb	Clav2+	181	Gt	Nylon L	281	Ba	PickOpen	381	St	EnsMxLP L	481	Gt	Santur	581	Wv	P5SawAtRnd	681	Wv	DigiOsc4
82	Kb	Clav2-	182	Gt	Nylon R	282	Ba	PickHarm	382	St	EnsMxLP R	482	Gt	Ud	582	Wv	OBSaw	682	Wv	DigiOsc5
83	Kb	Clav3	183	Gt	NylonHrmSt	283	Ba	PickMute	383	St	EnsMuteLP	483	Gt	Kanun	583	Wv	Saw2	683	Wv	DigiOsc6
84	Kb	Clav3+	184	Gt	NylonHrm L	284	Ba	PickDead	384	St	EnsMuteLP-	484	Gt	Baglama	584	Wv	3o3Saw	684	Wv	DigiOsc7
85	Kb	Clav3-	185	Gt	NylonHrm R	285	Ba	Pick FX	385	St	EnsMutLPSt	485	Gt	Bouzouk	585	Wv	3o3Saw2	685	Wv	Wave 1
86	Kb	Harpscd	186	Gt	StlOpnM St	286	Ba	Pick Mt FX	386	St	HrdEnsLPSt	486	Gt	Shamisen	586	Wv	3o3Squ	686	Wv	Wave 2
87	Cp	Celeste	187	Gt	StlOpnM L	287	Ba	Pick Dd FX	387	St	HrdEnsLP L	487	Gt	Koto	587	Wv	1o1Saw	687	Wv	Wave 3
88	Cp	Vibraphone	188	Gt	StlOpnM R	288	Ba	Pick+	388	St	HrdEnsLP R	488	Cp	Kalimba	588	Wv	1o1Sub	688	Wv	Wave 4
89	Cp	Mairmba	189	Gt	StlOpnH St	289	Ba	Pick Mt+	389	St	Harp	489	Cp	Gamelan1	589	Wv	SawSqu	689	Wv	Wave 5
90	Cp	GlockenSpl	190	Gt	StlOpnH L	290	Ba	Pick-	390	Br	BrsSctSt	490	Cp	Gamelan2	590	Wv	SquSaw	690	Wv	EP Wave 6
91	Cp	Xylophone	191	Gt	StlOpnH R	291	Ba	Pick Mt-	391	Br	BrsSctSt+	491	Cp	SteelDrum	591	Wv	MiniBa1	691	Wv	Org Wave1
92	Cp	TubularBel	192	Gt	StlHmmr St	292	Ba	PickFxHrm	392	Br	BrsSctSt-	492	Pc	Log1	592	Wv	MiniBa2	692	Wv	Org Wave2
93	Cp	Bell	193	Gt	StlHmmr L	293	Ba	PickFxOpn	393	Br	BrsSctL	493	Pc	Log2	593	Wv	MiniBa3	693	Wv	Org Wave3
94	Cp	BellSt1	194	Gt	StlHmmr R	294	Ba	PickFxMute	394	Br	BrsSctL+	494	Pc	Wataiko	594	Wv	MiniBa3-a	694	Wv	DigiBell1
95	Cp	BellSt2	195	Gt	StlSld St	295	Ba	PickFxDead	395	Br	BrsSctL-	495	Pc	DjembeEd	595	Wv	MiniBa3-b	695	Wv	DigiBell2
96	Cp	BrBell	196	Gt	StlSld L	296	Ba	PickOpHarm	396	Br	BrsSctR	496	Pc	DjembeMt	596	Wv	Q Synbass	696	Wv	DigiBell3
97	Cp	SmBell	197	Gt	StlSld R	297	Ba	Fing M	397	Br	BrsSctR+	497	Pc	DjembeOp	597	Wv	Punch	697	Wv	DigiBell4
98	Cp	FingerCym	198	Gt	StlHarm St	298	Ba	Fing H	398	Br	BrsSctR-	498	Pc	DjembeCmb	598	Wv	SynthBa1	698	Wv	DigiBell5
99	Cp	HandBell	199	Gt	StlHarm L	299	Ba	FingHarmo	399	Br	BrassFall	499	Pc	TablaBya	599	Wv	SynthBa2	699	Wv	DigiBell6
100	Cp	Hibasi	200	Gt	StlHarm R	300	Ba	Fng-Ded-FX	400	Br	Trumpet1	500	Pc	TablaNah	600	Wv	BlipBass	700	Wv	DigiBell7

№	Категория	Наименование	№	Категория	Наименование	№	Категория	Наименование	№	Категория	Наименование	№	Категория	Наименование	№	Категория	Наименование	№	Категория	Наименование
701	Wv	Spectrum1	801	Se	ElPerc4	901	Pc	Shaker 3	1001	Dr	BdNm2St	1101	Dr	BdElec1	1201	Dr	SdNm2St	1301	Dr	SdTgtSt2-3
702	Wv	Spectrum2	802	Se	ElPerc5	902	Pc	ShakerHip1	1002	Dr	BdNmL1-2	1102	Dr	BdElec2	1202	Dr	SdNm3St	1302	Dr	SdTgtSt3-4
703	Wv	Spectrum3	803	Se	ElPerc6	903	Pc	ShakerHip2	1003	Dr	BdNmR1-2	1103	Dr	BdElec3	1203	Dr	SdNm4St	1303	Dr	SdTgt1St
704	Wv	Sine	804	Se	ElPerc7	904	Pc	ShakerHip3	1004	Dr	BdNm1L	1104	Dr	BdElec4	1204	Dr	SdNmL1-4	1304	Dr	SdTgt2St
705	Wv	Noise	805	Se	ElPerc8	905	Pc	ShakerHip4	1005	Dr	BdNm1R	1105	Dr	BdElComp1	1205	Dr	SdNmR1-4	1305	Dr	SdTgt3St
706	Wv	VibeNP	806	Se	ElPerc9	906	Pc	ShekereDw	1006	Dr	BdNm2L	1106	Dr	BdElComp2	1206	Dr	SdNm1L	1306	Dr	SdTgt4St
707	Me	Birch St	807	Se	ElPerc10	907	Pc	ShekereUp	1007	Dr	BdNm2R	1107	Dr	BdElComp3	1207	Dr	SdNm1R	1307	Dr	SdTgtL1-4
708	Me	Birch L	808	Se	ElPerc11	908	Pc	ShekereSap	1008	Dr	BdFkSt1-2	1108	Dr	BdElFX1	1208	Dr	SdNm2L	1308	Dr	SdTgtR1-4
709	Me	Birch R	809	Se	ElPerc12	909	Pc	Tumbo 1	1009	Dr	BdFk1St	1109	Dr	BdElFX2	1209	Dr	SdNm2R	1309	Dr	SdTgt1L
710	Me	Willow St	810	Se	ElPerc13	910	Pc	Tumbo 2	1010	Dr	BdFk2St	1110	Dr	BdElGate	1210	Dr	SdNm3L	1310	Dr	SdTgt1R
711	Me	Willow L	811	Se	ElPerc14	911	Pc	Tumbo 3	1011	Dr	BdFkL1-2	1111	Dr	BdElClick	1211	Dr	SdNm3R	1311	Dr	SdTgt2L
712	Me	Willow R	812	Se	ElPerc15	912	Pc	TambrnSw	1012	Dr	BdFkR1-2	1112	Dr	BdElPwr1	1212	Dr	SdNm4L	1312	Dr	SdTgt2R
713	Me	Anemone St	813	Se	HiQ1	913	Pc	TambrnHit	1013	Dr	BdFkML	1113	Dr	BdElPwr2	1213	Dr	SdNm4R	1313	Dr	SdTgt3L
714	Me	Anemone L	814	Se	HiQ2	914	Pc	TambrnShk	1014	Dr	BdFkMR	1114	Dr	SdBldSt1-4	1214	Dr	SdFkSt1-3	1314	Dr	SdTgt3R
715	Me	Anemone R	815	Se	VoxHitRev	915	Pc	PandieroOp	1015	Dr	BdFkHL	1115	Dr	SdBldSt1-3	1215	Dr	SdFkSt1-2	1315	Dr	SdTgt4L
716	Me	MagnitudSt	816	Se	Bomb	916	Pc	PandierThm	1016	Dr	BdFkHR	1116	Dr	SdBldSt2-4	1216	Dr	SdFkSt2-3	1316	Dr	SdTgt4R
717	Me	Magnitud L	817	Se	TapeRewnd	917	Pc	PandierTip	1017	Dr	BdHiSt	1117	Dr	SdBldSt1-2	1217	Dr	SdFkSt1/3	1317	Dr	SdHipSt1-2
718	Me	Magnitud R	818	Se	FxGun2	918	Pc	PandroHeel	1018	Dr	BdHiL	1118	Dr	SdBldSt2-3	1218	Dr	SdFk1St	1318	Dr	SdHip1St
719	Me	SabreTone	819	Se	FxGun1	919	Pc	TmbourimOp	1019	Dr	BdHiR	1119	Dr	SdBldSt3-4	1219	Dr	SdFk2St	1319	Dr	SdHip2St
720	Me	StrngPadSt	820	Se	Thunder	920	Pc	TmbourmFng	1020	Dr	BdLoSt	1120	Dr	SdBldSt1	1220	Dr	SdFk3St	1320	Dr	SdHipL1-2
721	Me	StrngPad L	821	Se	TurnTable	921	Pc	TmbourimMt	1021	Dr	BdLoL	1121	Dr	SdBldSt2	1221	Dr	SdFkL1-3	1321	Dr	SdHipR1-2
722	Me	StrngPad R	822	Se	Police	922	Pc	AgogoHi	1022	Dr	BdLoR	1122	Dr	SdBldSt3	1222	Dr	SdFkR1-3	1322	Dr	SdHip1L
723	Me	VocalRes	823	Se	DoorSqk	923	Pc	AgogoLo	1023	Dr	BdHSonSt	1123	Dr	SdBldSt4	1223	Dr	SdFk1L	1323	Dr	SdHip1R
724	Me	OrchHit1St	824	Se	HeartBeat	924	Pc	AgogoLoTap	1024	Dr	BdHSonL	1124	Dr	SdBldL1-4	1224	Dr	SdFk1R	1324	Dr	SdHip2L
725	Me	OrchHit1 L	825	Se	Helicopter	925	Pc	GuiroLong	1025	Dr	BdHSonR	1125	Dr	SdBldR1-4	1225	Dr	SdFk2L	1325	Dr	SdHip2R
726	Me	OrchHit1 R	826	Se	Seashore	926	Pc	GuiroShort	1026	Dr	BdLSonSt	1126	Dr	SdBldL1	1226	Dr	SdFk2R	1326	Dr	SdRkOp1St
727	Me	OrchHit2St	827	Se	Telephone	927	Pc	GuiroSwp	1027	Dr	BdLSonL	1127	Dr	SdBldL2	1227	Dr	SdFk3L	1327	Dr	SdRkOp1L
728	Me	OrchHit2 L	828	Se	TelRing	928	Pc	SurdoOp	1028	Dr	BdLSonR	1128	Dr	SdBldL3	1228	Dr	SdFk3R	1328	Dr	SdRkOp1R
729	Me	OrchHit2 R	829	Se	Bird	929	Pc	SurdoMt	1029	Dr	BdFkSonSt	1129	Dr	SdBldL4	1229	Dr	SdFkAySt	1329	Dr	SdRkMte1St
730	Me	OrchHit3	830	Se	Stream	930	Pc	Stick	1030	Dr	BdFkSonL	1130	Dr	SdBldR1	1230	Dr	SdFkAyL	1330	Dr	SdRkMte1L
731	Me	VoxBell	831	Se	Gunshot	931	Pc	Stick2	1031	Dr	BdFkSonR	1131	Dr	SdBldR2	1231	Dr	SdFkAyR	1331	Dr	SdRkMte1R
732	Me	Melow	832	Se	Applause	932	Pc	Castanet	1032	Dr	BdRk1St	1132	Dr	SdBldR3	1232	Dr	SdBsSt1-3	1332	Dr	SdRkRim1St
733	Me	WindChime	833	Se	RainLoop	933	Pc	Clave	1033	Dr	BdRk1L	1133	Dr	SdBldR4	1233	Dr	SdBsSt1-2	1333	Dr	SnRkRim1L
734	Me	BellAir	834	Se	Scratch H	934	Pc	WoodBlock	1034	Dr	BdRk1R	1134	Dr	SdSolSt1-4	1234	Dr	SdBsSt2-3	1334	Dr	SdRkRim1R
735	Me	BigSyn	835	Se	Scratch L	935	Pc	Vibraslap	1035	Dr	BdRk2St	1135	Dr	SdSolSt1-3	1235	Dr	SdBsSt1/3	1335	Dr	SdRkOp2St
736	Me	TranCho	836	Se	ScratchDwn	936	Pc	Whistle	1036	Dr	BdRk2L	1136	Dr	SdSolSt2-4	1236	Dr	SdBs1St	1336	Dr	SdRkOp2L
737	Me	StabOrgLP	837	Se	ScratchHiF	937	Pc	TriangleSw	1037	Dr	BdRk2R	1137	Dr	SdSolSt1-2	1237	Dr	SdBs2St	1337	Dr	SdRkOp2R
738	Me	Eery	838	Se	ScratchHiR	938	Pc	TriangleOp	1038	Dr	BdDry1	1138	Dr	SdSolSt2-3	1238	Dr	SdBs3St	1338	Dr	SdRkMte2St
739	Me	Electer	839	Se	ScratchLoF	939	Pc	TriangleMt	1039	Dr	BdDry2	1139	Dr	SdSolSt3-4	1239	Dr	SdBsL1-3	1339	Dr	SdRkMte2L
740	Me	HH Hit	840	Se	ScratchLoR	940	Pc	HandClapSt	1040	Dr	BdPop	1140	Dr	SdSolL1-4	1240	Dr	SdBsR1-3	1340	Dr	SdRkMte2R
741	Me	VoxAlk	841	Se	ScratchBdF	941	Pc	HandClapL	1041	Dr	BdVar1	1141	Dr	SdSolR1-4	1241	Dr	SdBs1L	1341	Dr	SdRkRim2St
742	Me	MultiPiano	842	Se	ScratchBdR	942	Pc	HandClapR	1042	Dr	BdVar2	1142	Dr	SdSolSt1	1242	Dr	SdBs1R	1342	Dr	SdRkRim2L
743	Me	BellChoir	843	Se	ScratchSdF	943	Pc	Handbell L	1043	Dr	BdRoom1	1143	Dr	SdSolSt2	1243	Dr	SdBs2L	1343	Dr	SdRkRim2R
744	Me	DirtyPerc	844	Se	ScratchSdR	944	Pc	Handbell H	1044	Dr	BdRoom2	1144	Dr	SdSolSt3	1244	Dr	SdBs2R	1344	Dr	SdRkFlmSt
745	Me	HiLo	845	Se	ScratchVoF	945	Pc	Cowbell1	1045	Dr	BdRoom3	1145	Dr	SdSolSt4	1245	Dr	SdBs3L	1345	Dr	SdRkFlmL
746	Me	AirHoseSt	846	Se	ScratchVoR	946	Pc	Cowbell2	1046	Dr	GrnCasOpSt	1146	Dr	SdSolL1	1246	Dr	SdBs3R	1346	Dr	SdRkFlmR
747	Me	AirHoseL	847	Se	ScratchStp	947	Pc	MamboBl1	1047	Dr	GrnCasOp L	1147	Dr	SdSolL2	1247	Dr	SdSonSt1-4	1347	Dr	SdPicol
748	Me	AirHoseR	848	Se	ScratchSpn	948	Pc	MamboBl2	1048	Dr	GrnCasOp R	1148	Dr	SdSolL3	1248	Dr	SdSonSt1-3	1348	Dr	SdPcRim
749	Me	Bubble	849	Se	ScratchHip	949	Pc	MamboBdy	1049	Dr	GrnCasMtSt	1149	Dr	SdSolL4	1249	Dr	SdSonSt2-4	1349	Dr	SdPcRim2
750	Me	Swarm	850	Se	ScratchHp2	950	Pc	ChaCha	1050	Dr	GrnCasMt L	1150	Dr	SdSolR1	1250	Dr	SdSonSt1-2	1350	Dr	SdMid
751	Me	Lektronica	851	Se	ScratchAtk	951	Pc	SleighBel	1051	Dr	GrnCasMt R	1151	Dr	SdSolR2	1251	Dr	SdSonSt2-3	1351	Dr	SdMdRim
752	Me	SpaceScrem	852	Se	ScratchR&B	952	Pc	BellTree	1052	Dr	BdGate	1152	Dr	SdSolR3	1252	Dr	SdSonSt3-4	1352	Dr	SdAmb
753	Me	RadioNz	853	Se	ScratchCmb	953	Pc	ClapT9	1053	Dr	BdFXGate	1153	Dr	SdSolR4	1253	Dr	SdSon1St	1353	Dr	SdGate1
754	Me	OohFB	854	Se	ScratchCb2	954	Pc	ClapAnSm	1054	Dr	BdT9-1	1154	Dr	SdPwrSt1-4	1254	Dr	SdSon2St	1354	Dr	SdGate2
755	Me	Fairwave	855	Se	ScratchCb3	955	Pc	ElClap1	1055	Dr	BdT9-2	1155	Dr	SdPwrSt1-3	1255	Dr	SdSon3St	1355	Dr	SdLdwHMono
756	Me	Hoo	856	Se	ScratchCb4	956	Pc	ElClap2	1056	Dr	BdT9-3	1156	Dr	SdPwrSt2-4	1256	Dr	SdSon4St	1356	Dr	SdBrRim
757	Me	Mind Bell	857	Pc	Conga Opn	957	Pc	CongaT8	1057	Dr	BdT9-4	1157	Dr	SdPwrSt1-2	1257	Dr	SdSonL1-4	1357	Dr	SdDry
758	Me	Loop145	858	Pc	CongaOpSlp	958	Pc	CowBelT8	1058	Dr	BdT9Hd1	1158	Dr	SdPwrSt2-3	1258	Dr	SdSonR1-4	1358	Dr	SdHeavy
759	Me	X-Fade	859	Pc	CongaTip	959	Pc	CowBelRX11	1059	Dr	BdT9Hd2	1159	Dr	SdPwrSt3-4	1259	Dr	SdSon1L	1359	Dr	SdGM
760	Me	ResoXFade	860	Pc	CongaBtm	960	Pc	CowBelAnCR	1060	Dr	BdT9Hd3	1160	Dr	SdPwrSt1	1260	Dr	SdSon1R	1360	Dr	SdRkStk1St
761	Me	Quiek	861	Pc	CongaStick	961	Pc	ElCowbell	1061	Dr	BdT8-1	1161	Dr	SdPwrSt2	1261	Dr	SdSon2L	1361	Dr	SdRkStk1L
762	Me	LfoSeq	862	Pc	Quint1Opn	962	Pc	AnaShaker	1062	Dr	BdT8-2	1162	Dr	SdPwrSt3	1262	Dr	SdSon2R	1362	Dr	SnRkStk1R
763	Me	HopFX1	863	Pc	Quint1Slp	963	Pc	TambrnRX5	1063	Dr	BdT8-3	1163	Dr	SdPwrSt4	1263	Dr	SdSon3L	1363	Dr	SdRkStk2St
764	Me	HopFX2	864	Pc	Quint2Opn	964	Pc	TambrnAnCR	1064	Dr	BdAnSm	1164	Dr	SdPwrL1-4	1264	Dr	SdSon3R	1364	Dr	SdRkStk2L
765	Me	Sonar1	865	Pc	Quint2Heel	965	Pc	ElTambrn1	1065	Dr	BdAnCR	1165	Dr	SdPwrR1-4	1265	Dr	SdSon4L	1365	Dr	SdRkStk2R
766	Me	Sonar2	866	Pc	TumbaOpen	966	Pc	ElTambrn2	1066	Dr	BdHuman1	1166	Dr	SdPwrL1	1266	Dr	SdSon4R	1366	Dr	SdHpStk1
767	Me	HitOrch1	867	Pc	TumbaSlp	967	Pc	MarcsT8	1067	Dr	BdHuman2	1167	Dr	SdPwrL2	1267	Dr	SdBlSt1-3	1367	Dr	SdHpStk2
768	Me	HitBrass	868	Pc	TumbaTip	968	Pc	ElMarcs	1068	Dr	BdBlip	1168	Dr	SdPwrL3	1268	Dr	SdBlSt1-2	1368	Dr	SdHpStk3
769	Me	StabOrch	869	Pc	TumbaHeel	969	Pc	ClaveT8	1069	Dr	BdBlpHd	1169	Dr	SdPwrL4	1269	Dr	SdBlSt2-3	1369	Dr	SdHpStk4
770	Me	StabGiant	870	Pc	CuicaLo	970	Pc	ElTriangl	1070	Dr	BdJngl1	1170	Dr	SdPwrR1	1270	Dr	SdBlSt1/3	1370	Dr	SdHpStk5
771	Me	StabHard	871	Pc	CuicaHi	971	Pc	AnaClick	1071	Dr	BdJngl2	1171	Dr	SdPwrR2	1271	Dr	SdBl1St	1371	Dr	SdHpStk6St
772	Me	StabOrgan2	872	Pc	Bongo L	972	Dr	BdSnap1-2	1072	Dr	BdJngl3	1172	Dr	SdPwrR3	1272	Dr	SdBl2St	1372	Dr	SdHpStk6L
773	Me	StabAah	873	Pc	Bongo H1	973	Dr	BdSnap1	1073	Dr	BdD&B1	1173	Dr	SdPwrR4	1273	Dr	SdBl3St	1373	Dr	SdHpStk6R
774	Me	Hit Uhh	874	Pc	Bongo H2	974	Dr	BdSnap2	1074	Dr	BdD&B2	1174	Dr	SdRngSt1-4	1274	Dr	SdBlL1-3	1374	Dr	SdHpStk7
775	Me	HitOrch2	875	Pc	TmbaleH1-3	975	Dr	BdSnapL1-2	1075	Dr	BdR&B1	1175	Dr	SdRngSt1-3	1275	Dr	SdBlR1-3	1375	Dr	SdHpStk8
776	Me	VoxDrum	876	Pc	TimbaleHi1	976	Dr	BdSnapR1-2	1076	Dr	BdR&B2	1176	Dr	SdRngSt2-4	1276	Dr	SdBl1L	1376	Dr	SdClRmSt
777	Me	Raspberry	877	Pc	TimbaleHi2	977	Dr	BdSnapL1	1077	Dr	BdHipDp	1177	Dr	SdRngSt1-2	1277	Dr	SdBl1R	1377	Dr	SdClRmL
778	Me	DigiBreath	878	Pc	TimbaleHi3	978	Dr	BdSnapL2	1078	Dr	BdBrkDp	1178	Dr	SdRngSt2-3	1278	Dr	SdBl2L	1378	Dr	SdClRmR
779	Me	EngnRoomSt	879	Pc	TmbaleL1-3	979	Dr	BdSnapR1	1079	Dr	BdBreak1	1179	Dr	SdRngSt3-4	1279	Dr	SdBl2R	1379	Dr	SdClRim2
780	Me	EngnRoom L	880	Pc	TimbaleLo1	980	Dr	BdSnapR2	1080	Dr	BdBreak2	1180	Dr	SdRngSt1	1280	Dr	SdBl3L	1380	Dr	SdClRim3
781	Me	EngnRoom R	881	Pc	TimbaleLo2	981	Dr	BdTigt1-2	1081	Dr	BdBreakHvy	1181	Dr	SdRngSt2	1281	Dr	SdBl3R	1381	Dr	SdRkRolSt
782	Me	DigiHeli	882	Pc	TimbaleRim	982	Dr	BdTigt1	1082	Dr	BdBreakHrd	1182	Dr	SdRngSt3	1282	Dr	SdBhSt1-3	1382	Dr	SdRkRolL
783	Me	Shower St	883	Pc	TmblPailaH	983	Dr	BdTigt2	1083	Dr	BdDist1	1183	Dr	SdRngSt4	1283	Dr	SdBhSt1-2	1383	Dr	SdRkRolR
784	Me	Shower L	884	Pc	TmblPailaL	984	Dr	BdTigtL1-2	1084	Dr	BdDist2	1184	Dr	SdRngL1-4	1284	Dr	SdBhSt2-3	1384	Dr	SdRkRolDSt
785	Me	Shower R	885	Pc	Paila L	985	Dr	BdTigtR1-2	1085	Dr	BdDist3	1185	Dr	SdRngR1-4	1285	Dr	SdBhSt1/3	1385	Dr	SdRkRolDL
786	Me	ComputerSt	886	Pc	Paila H	986	Dr	BdTigtL1	1086	Dr	BdDist4	1186	Dr	SdRngL1	1286	Dr	SdBh1St	1386	Dr	SdRkRolDR
787	Me	Computer L	887	Pc	GanzaAc	987	Dr	BdTigtL2	1087	Dr	BdDist5	1187	Dr	SdRngL2	1287	Dr	SdBh2St	1387	Dr	SdLvRolSt
788	Me	Computer R	888	Pc	GanzaBk	988	Dr	BdTigtR1	1088	Dr	BdDistRM	1188	Dr	SdRngL3	1288	Dr	SdBh3St	1388	Dr	SdLvRolL
789	Me	Chatter	889	Pc	GanzaFw	989	Dr	BdTigtR2	1089	Dr	Bd+HH	1189	Dr	SdRngL4	1289	Dr	SdBhL1-3	1389	Dr	SdLvRolR
790	Se	Ripper	890	Pc	Maracas1-2	990	Dr	BdAmb1-2	1090	Dr	BdFxHmr	1190	Dr	SdRngR1	1290	Dr	SdBhR1-3	1390	Dr	SdRollMono
791	Se	Glass	891	Pc	MaracasSlr	991	Dr	BdAmb1	1091	Dr	BdZapHrd	1191	Dr	SdRngR2	1291	Dr	SdBh1L	1391	Dr	SdBrMtSt
792	Se	BellFX1	892	Pc	MaracasStc	992	Dr	BdAmb2	1092	Dr	BdZapMid	1192	Dr	SdRngR3	1292	Dr	SdBh1R	1392	Dr	SdBrMtL
793	Se	BellFX2	893	Pc	Cabasa1-2	993	Dr	BdAmbL1-2	1093	Dr	BdSus	1193	Dr	SdRngR4	1293	Dr	SdBh2L	1393	Dr	SdBrMtR
794	Se	IndusTom	894	Pc	Cabasa1	994	Dr	BdAmbR1-2	1094	Dr	BdTekPower	1194	Dr	SdNmSt1-4	1294	Dr	SdBh2R	1394	Dr	SdBrMt2St
795	Se	NzBurst	895	Pc	Cabasa2	995	Dr	BdAmbL1	1095	Dr	BdHardLong	1195	Dr	SdNmSt1-3	1295	Dr	SdBh3L	1395	Dr	SdBrMt2L
796	Se	Zap1	896	Pc	Caxixi1-2	996	Dr	BdAmbL2	1096	Dr	BdATite	1196	Dr	SdNmSt2-4	1296	Dr	SdBh3R	1396	Dr	SdBrMt2R
797	Se	Zap2	897	Pc	Caxixi1	997	Dr	BdAmbR1	1097	Dr	BdAnHard	1197	Dr	SdNmSt1-2	1297	Dr	SdTgtSt1-4	1397	Dr	SdBrSwrSt
798	Se	ElPerc1	898	Pc	Caxixi2	998	Dr	BdAmbR2	1098	Dr	BdLofi	1198	Dr	SdNmSt2-3	1298	Dr	SdTgtSt1-3	1398	Dr	SdBrSwrL
799	Se	ElPerc2	899	Pc	Shaker 1	999	Dr	BdNmSt1-2	1099	Dr	BdThkSkn	1199	Dr	SdNmSt3-4	1299	Dr	SdTgtSt2-4	1399	Dr	SdBrSwrR
800	Se	ElPerc3	900	Pc	Shaker 2	1000	Dr	BdNm1St	1100	Dr	BdSlimy	1200	Dr	SdNm1St	1300	Dr	SdTgtSt1-2	1400	Dr	SdBSwrAtSt

№	Категория	Наименование	№	Категория	Наименование	№	Категория	Наименование	№	Категория	Наименование	№	Категория	Наименование
1401	Dr	SdBrSwrAtL	1501	Dr	HHCls3 St	1601	Dr	HHClT8-2	1701	Dr	ChinaSt	1801	Se	Ag FX29 R
1402	Dr	SdBrSwrAtR	1502	Dr	HHCls4 St	1602	Dr	HHOpT8-2	1702	Dr	ChinaL	1802	Se	Ag FX30 St
1403	Dr	SdMrc1SwSt	1503	Dr	HHCls1-4 L	1603	Dr	HHClRX5	1703	Dr	ChinaR	1803	Se	Ag FX30 L
1404	Dr	SdMrc1S St	1504	Dr	HHCls1-4 R	1604	Dr	HHClAnCR	1704	Dr	ChinaRL	1804	Se	Ag FX30 R
1405	Dr	SdMrc1H St	1505	Dr	HHCls1 L	1605	Dr	HHOpAnCR	1705	Dr	China	1805	Se	Eg FX01
1406	Dr	SdMrc1Sw L	1506	Dr	HHCls2 L	1606	Dr	HHClBreak	1706	Dr	SplashSt	1806	Se	Eg FX02
1407	Dr	SdMrc1Sw R	1507	Dr	HHCls3 L	1607	Dr	HHPdlBreak	1707	Dr	SplashL	1807	Se	Eg FX03
1408	Dr	SdMrc1S L	1508	Dr	HHCls4 L	1608	Dr	HHClD&B	1708	Dr	SplashR	1808	Se	Eg FX04
1409	Dr	SdMrc1H L	1509	Dr	HHCls1 R	1609	Dr	HHPdlD&B	1709	Dr	SplashRL	1809	Se	Eg FX05
1410	Dr	SdMrc1S R	1510	Dr	HHCls2 R	1610	Dr	HHOpD&B	1710	Dr	CrashT9	1810	Se	Eg FX06
1411	Dr	SdMrc1H R	1511	Dr	HHCls3 R	1611	Dr	HHRvD&B	1711	Dr	CrashT8	1811	Se	Eg FX07
1412	Dr	SdMrc2SwSt	1512	Dr	HHCls4 R	1612	Dr	HHClTek	1712	Dr	CrashSyn	1812	Se	Eg FX08
1413	Dr	SdMrc2S St	1513	Dr	HHCls1-4RL	1613	Dr	HHOpTek	1713	Dr	RideT9	1813	Se	Eg FX09
1414	Dr	SdMrc2H St	1514	Dr	HHCls1 RL	1614	Dr	HHClHip	1714	Dr	RevCymbal	1814	Se	Eg FX10
1415	Dr	SdMrc2Sw L	1515	Dr	HHCls2 RL	1615	Dr	HHPdlHip	1715	Se	Ag FX01 St	1815	Se	Eg FX11
1416	Dr	SdMrc2Sw R	1516	Dr	HHCls3 RL	1616	Dr	HHOpHip	1716	Se	Ag FX01 L	1816	Se	Eg FX12
1417	Dr	SdMrc2S L	1517	Dr	HHCls4 RL	1617	Dr	HHClLoFi	1717	Se	Ag FX01 R	1817	Se	Eg FX13
1418	Dr	SdMrc2H L	1518	Dr	HHPdl1-3St	1618	Dr	HHOpLoFi	1718	Se	Ag FX02 St	1818	Se	Eg FX14
1419	Dr	SdMrc2S R	1519	Dr	HHPdl1 St	1619	Dr	HHClSyn	1719	Se	Ag FX02 L	1819	Se	Eg FX15
1420	Dr	SdMrc2H R	1520	Dr	HHPdl2 St	1620	Dr	HHOpSyn	1720	Se	Ag FX02 R	1820	Se	Eg FX16
1421	Dr	SdMrcRolSt	1521	Dr	HHPdl3 St	1621	Dr	HHClFx	1721	Se	Ag FX03 St	1821	Se	Eg FX17
1422	Dr	SdMrcRol L	1522	Dr	HHPdl1-3 L	1622	Dr	HHOpFx	1722	Se	Ag FX03 L	1822	Se	Eg FX18
1423	Dr	SdMrcRol R	1523	Dr	HHPdl1-3 R	1623	Dr	HHOpHuman	1723	Se	Ag FX03 R	1823	Se	Eg FX19
1424	Dr	SdElec1	1524	Dr	HHPdl1 L	1624	Dr	TomHi St	1724	Se	Ag FX04 St	1824	Se	Eg FX20
1425	Dr	SdElec2	1525	Dr	HHPdl2 L	1625	Dr	TomHi L	1725	Se	Ag FX04 L	1825	Se	Eg FX21
1426	Dr	SdElec3	1526	Dr	HHPdl3 L	1626	Dr	TomHi R	1726	Se	Ag FX04 R	1826	Se	Eg FX22
1427	Dr	SdElec4	1527	Dr	HHPdl1 R	1627	Dr	TomHi RL	1727	Se	Ag FX05 St	1827	Se	Eg FX23
1428	Dr	SdElec5	1528	Dr	HHPdl2 R	1628	Dr	TomMid St	1728	Se	Ag FX05 L	1828	Se	Ab FX01
1429	Dr	SdElec6	1529	Dr	HHPdl3 R	1629	Dr	TomMid L	1729	Se	Ag FX05 R	1829	Se	Ab FX02
1430	Dr	SdElec7	1530	Dr	HHPdl1-3RL	1630	Dr	TomMid R	1730	Se	Ag FX06 St	1830	Se	Ab FX03
1431	Dr	SdElec8	1531	Dr	HHPdl1 RL	1631	Dr	TomMid RL	1731	Se	Ag FX06 L	1831	Se	Ab FX04
1432	Dr	SdElec9	1532	Dr	HHPdl2 RL	1632	Dr	TomLow St	1732	Se	Ag FX06 R	1832	Se	Ab FX05
1433	Dr	SdElec10	1533	Dr	HHPdl3 RL	1633	Dr	TomLow L	1733	Se	Ag FX07 St	1833	Se	Ab FX06
1434	Dr	SdElec11	1534	Dr	HHOpn1-2St	1634	Dr	TomLow R	1734	Se	Ag FX07 L	1834	Se	Ab FX07
1435	Dr	SdElec12	1535	Dr	HHOpn1 St	1635	Dr	TomLow RL	1735	Se	Ag FX07 R	1835	Se	Ab FX08
1436	Dr	SdT9-1	1536	Dr	HHOpn2 St	1636	Dr	TomFlr St	1736	Se	Ag FX08 St	1836	Se	Ab FX09
1437	Dr	SdT9-2	1537	Dr	HHOpn1-2 L	1637	Dr	TomFlr L	1737	Se	Ag FX08 L	1837	Se	Eb FX 01
1438	Dr	SdT9-3	1538	Dr	HHOpn1-2 R	1638	Dr	TomFlr R	1738	Se	Ag FX08 R	1838	Se	Eb FX 02
1439	Dr	SdT9-4	1539	Dr	HHOpn1 L	1639	Dr	TomFlr RL	1739	Se	Ag FX09 St	1839	Se	Eb FX 03
1440	Dr	SdT9-5	1540	Dr	HHOpn2 L	1640	Dr	TomRkHiSt	1740	Se	Ag FX09 L	1840	Se	Eb FX 04
1441	Dr	SdT9Gate	1541	Dr	HHOpn1 R	1641	Dr	TomRkHiL	1741	Se	Ag FX09 R	1841	Se	Eb FX 05
1442	Dr	SdT9Rim	1542	Dr	HHOpn2 R	1642	Dr	TomRkHiR	1742	Se	Ag FX10 St	1842	Se	Eb FX 06
1443	Dr	SdT8-1	1543	Dr	HHOpn1-2RL	1643	Dr	TomRkHiRL	1743	Se	Ag FX10 L	1843	Se	Eb FX 07
1444	Dr	SdT8-2	1544	Dr	HHOpn1 RL	1644	Dr	TomRkMdSt	1744	Se	Ag FX10 R	1844	Se	Eb FX 08
1445	Dr	SdT8-3	1545	Dr	HHOpn2 RL	1645	Dr	TomRkMdL	1745	Se	Ag FX11 St	1845	Se	Eb FX 09
1446	Dr	SdT8-4	1546	Dr	HHClFtSt	1646	Dr	TomRkMdR	1746	Se	Ag FX11 L	1846	Se	Eb FX 10
1447	Dr	SdT8-5	1547	Dr	HHClFtL	1647	Dr	TomRkMdRL	1747	Se	Ag FX11 R	1847	Se	Eb FX 11
1448	Dr	SdT8Rim	1548	Dr	HHClFtR	1648	Dr	TomRkLoSt	1748	Se	Ag FX12 St	1848	Se	Eb FX 12
1449	Dr	SdAnSm	1549	Dr	HHClFtRL	1649	Dr	TomRkLoL	1749	Se	Ag FX12 L	1849	Se	Eb FX 13
1450	Dr	SdAnSmRim	1550	Dr	HHHlf2St	1650	Dr	TomRkLoR	1750	Se	Ag FX12 R	1850	Se	Eb FX 14
1451	Dr	SdAnCR	1551	Dr	HHHlf2L	1651	Dr	TomRkLoRL	1751	Se	Ag FX13 St	1851	Se	Eb FX 15
1452	Dr	SdAnCRRim	1552	Dr	HHHlf2R	1652	Dr	TomMonoHi	1752	Se	Ag FX13 L	1852	Se	Eb FX 16
1453	Dr	SdHuman1	1553	Dr	HHHlf2RL	1653	Dr	TomMonoLo	1753	Se	Ag FX13 R	1853	Se	Eb FX 17
1454	Dr	SdHuman2	1554	Dr	HHOp2St	1654	Dr	TomDryHi	1754	Se	Ag FX14 St	1854	Se	Eb FX 18
1455	Dr	SdJngl1	1555	Dr	HHOp2L	1655	Dr	TmDryLo	1755	Se	Ag FX14 L	1855	Se	Eb FX 19
1456	Dr	SdJngl2	1556	Dr	HHOp2R	1656	Dr	TomAmbHi	1756	Se	Ag FX14 R	1856	Se	Eb FX 20
1457	Dr	SdJngl3	1557	Dr	HHOp2RL	1657	Dr	TomAmbLo	1757	Se	Ag FX15 St	1857	Se	Eb FX 21
1458	Dr	SdJnglFx	1558	Dr	HHClRkStSw	1658	Dr	TomT9Hi	1758	Se	Ag FX15 L	1858	Se	Eb FX 22
1459	Dr	SdD&B1	1559	Dr	HHClRkRLSw	1659	Dr	TomT9Lo	1759	Se	Ag FX15 R	1859	Se	Eb FX 23
1460	Dr	SdD&B2	1560	Dr	HHClRkSSt	1660	Dr	TomT8	1760	Se	Ag FX16 St			
1461	Dr	SdD&B3	1561	Dr	HHClRkSRL	1661	Dr	TomSyn1	1761	Se	Ag FX16 L			
1462	Dr	SdD&B4	1562	Dr	HHClRkHSt	1662	Dr	TomSyn2	1762	Se	Ag FX16 R			
1463	Dr	SdR&B1	1563	Dr	HHClRkHRL	1663	Dr	TomAnSm	1763	Se	Ag FX17 St			
1464	Dr	SdR&B1Rm	1564	Dr	HHClRkLSw	1664	Dr	TomDistHi	1764	Se	Ag FX17 L			
1465	Dr	SdR&B2	1565	Dr	HHClRkRSw	1665	Dr	TomDistLo	1765	Se	Ag FX17 R			
1466	Dr	SdHip1	1566	Dr	HHClRkSL	1666	Dr	CrashCymSt	1766	Se	Ag FX18 St			
1467	Dr	SdHip2	1567	Dr	HHClRkSR	1667	Dr	CrashCym L	1767	Se	Ag FX18 L			
1468	Dr	SdHip3	1568	Dr	HHClRkHL	1668	Dr	CrashCym R	1768	Se	Ag FX18 R			
1469	Dr	SdHipGate	1569	Dr	HHClRkHR	1669	Dr	CrashCymRL	1769	Se	Ag FX19 St			
1470	Dr	SdHipRm1	1570	Dr	HHPdRkStSw	1670	Dr	CrashSt	1770	Se	Ag FX19 L			
1471	Dr	SdHipRm2	1571	Dr	HHPdRkRLSw	1671	Dr	CrashL	1771	Se	Ag FX19 R			
1472	Dr	SdHipRm3	1572	Dr	HHPdlRkLSw	1672	Dr	CrashR	1772	Se	Ag FX20 St			
1473	Dr	SdHipRm4	1573	Dr	HHPdlRkRSw	1673	Dr	CrashRL	1773	Se	Ag FX20 L			
1474	Dr	SdHipRm5	1574	Dr	HHClRk2St	1674	Dr	Crash	1774	Se	Ag FX20 R			
1475	Dr	SdBreak1	1575	Dr	HHClRk2L	1675	Dr	Crash2	1775	Se	Ag FX21 St			
1476	Dr	SdBreak2	1576	Dr	HHClRk2R	1676	Dr	HndCymOpSt	1776	Se	Ag FX21 L			
1477	Dr	SdBreak3	1577	Dr	HHClRk2RL	1677	Dr	HndCymOp L	1777	Se	Ag FX21 R			
1478	Dr	SdBreakHvy	1578	Dr	HHPdlRkSt	1678	Dr	HndCymOp R	1778	Se	Ag FX22 St			
1479	Dr	SdBreakRol	1579	Dr	HHPdlRkL	1679	Dr	HndCymMtSt	1779	Se	Ag FX22 L			
1480	Dr	SdFx1	1580	Dr	HHPdlRkR	1680	Dr	HndCymMt L	1780	Se	Ag FX22 R			
1481	Dr	SdFx2	1581	Dr	HHPdlRkRL	1681	Dr	HndCymMt R	1781	Se	Ag FX23 St			
1482	Dr	SdFx3	1582	Dr	HHOpRkStSw	1682	Dr	RideCym St	1782	Se	Ag FX23 L			
1483	Dr	SdFx4	1583	Dr	HHOpRkRLSw	1683	Dr	RideCym L	1783	Se	Ag FX23 R			
1484	Dr	SdClpAna	1584	Dr	HHOpRkSt	1684	Dr	RideCym R	1784	Se	Ag FX24 St			
1485	Dr	SdDist	1585	Dr	HHOpRkRL	1685	Dr	RideCym RL	1785	Se	Ag FX24 L			
1486	Dr	SdCut	1586	Dr	HHHfOpRkSt	1686	Dr	RideSt	1786	Se	Ag FX24 R			
1487	Dr	SdDodgH	1587	Dr	HHOpRkLSw	1687	Dr	RideL	1787	Se	Ag FX25 St			
1488	Dr	SdDodgL	1588	Dr	HHOpRkRSw	1688	Dr	RideR	1788	Se	Ag FX25 L			
1489	Dr	SdFM	1589	Dr	HHOpRkL	1689	Dr	RideRL	1789	Se	Ag FX25 R			
1490	Dr	SdFMRim	1590	Dr	HHOpRkR	1690	Dr	RideCup St	1790	Se	Ag FX26 St			
1491	Dr	SdSyn	1591	Dr	HHHlfOpRkL	1691	Dr	RideCup L	1791	Se	Ag FX26 L			
1492	Dr	SdClappy	1592	Dr	HHHlfOpRkR	1692	Dr	RideCup R	1792	Se	Ag FX26 R			
1493	Dr	SdTimbr	1593	Dr	HHHfOpRkRL	1693	Dr	RideCup RL	1793	Se	Ag FX27 St			
1494	Dr	SdWood	1594	Dr	HHClMono	1694	Dr	CupSt	1794	Se	Ag FX27 L			
1495	Dr	SdHammr	1595	Dr	HHOpMono	1695	Dr	CupL	1795	Se	Ag FX27 R			
1496	Dr	SdLofi	1596	Dr	HHPdlMono	1696	Dr	CupR	1796	Se	Ag FX28 St			
1497	Dr	SdRimSE	1597	Dr	HHClT9	1697	Dr	CupRL	1797	Se	Ag FX28 L			
1498	Dr	HHCls1-4St	1598	Dr	HHOpT9	1698	Dr	RideMono	1798	Se	Ag FX28 R			
1499	Dr	HHCls1 St	1599	Dr	HHClT8-1	1699	Dr	CupMono	1799	Se	Ag FX29 St			
1500	Dr	HHCls2 St	1600	Dr	HHOpT8-1	1700	Dr	CupMono2	1800	Se	Ag FX29 L			

ПОЛЬЗОВАТЕЛЬСКИЙ 1 (USER1)

Номер	Наименование исполнительского стиля	Категория исполнительского стиля	Подкатегория
1	Prologue	Co	SEQ
2	Ariane	Co	SEQ
3	Lo-LoRider	Co	SPLIT
4	Ganesha	Co	SPLIT
5	DJ Chartz	Co	SEQ
6	DivaHaus	Co	SPLIT
7	R&Ballad 1	Co	SPLIT
8	LunarBeams	Co	SEQ
9	Nasca	Me	MOTION
10	Flamenco	Gt	A.GTR
11	ChillnKeys	Co	SPLIT
12	Intruder	Co	SEQ
13	Prayer	Co	SEQ
14	Mr.Rock	Co	SPLIT
15	Yearning	Co	SEQ
16	Galaxy	Me	MOTION
17	The Core	Co	SPLIT
18	Stockholm	Co	SEQ
19	MoreBling	Co	SPLIT
20	HIP -E-	Co	SPLIT
21	BreakTranz	Co	SEQ
22	BottomLine	Co	SPLIT
23	SoulStrngz	Co	SPLIT
24	Dronic	Co	SEQ
25	Pacific	Me	MOTION
26	Campfire1	Gt	A.GTR
27	MilesAway	Co	SPLIT
28	Machine	Co	SEQ
29	Mr.Lectro	Co	SPLIT
30	MetalHeavy	Co	SPLIT
31	India?	Co	SEQ
32	Rushing	Pd	BRIGHT
33	NeonZone	Co	SPLIT
34	Over Sun	Me	MOTION
35	Lama	Co	SPLIT
36	StreetBeat	Co	SPLIT
37	The Pusher	Co	SEQ
38	FunkyHouse	Co	SPLIT
39	forplay	Co	SPLIT
40	Powerdrive	Co	SEQ
41	Kurofune	Me	MOTION
42	Strum&Comp	Co	SPLIT
43	Chilly	Co	SPLIT
44	Hexad	Co	SEQ
45	Charm	Co	SEQ
46	Alterno	Co	SPLIT
47	Masala	Co	SEQ
48	WildMotion	Me	MOTION
49	D&BFusion	Co	SPLIT
50	Trance Up!	Co	SEQ
51	Maguena	Co	SPLIT
52	Phono-	Co	SPLIT
53	Trance M	Co	SEQ
54	HouseDat	Co	SPLIT
55	FunkGuys	Co	SPLIT
56	ElctrcShuf	Co	SEQ
57	Specimen	Me	MOTION
58	Campfire2	Gt	A.GTR
59	Trancy	Co	SPLIT
60	bigdirty	Co	SEQ
61	Cubic	Co	SEQ
62	HeavyJam	Co	SPLIT
63	UduFlootu	Co	SEQ
64	Ice Age	Me	MOTION

Номер	Наименование исполнительского стиля	Категория исполнительского стиля	Подкатегория
65	Juggernaut	Co	SPLIT
66	Pizzy Lane	Co	SEQ
67	Hip Hump	Co	SEQ
68	Warpman	Co	SEQ
69	2nd Floor	Co	SEQ
70	4theFloor	Co	SPLIT
71	R&Ballad 2	Co	SPLIT
72	Latechno	Co	SEQ
73	SmallWing	Me	MOTION
74	Salvador	Co	SPLIT
75	AtomDance	Co	SEQ
76	Un-Normal	Co	SEQ
77	Planet	Co	SEQ
78	Rockey	Co	SPLIT
79	HellishVox	Me	MOTION
80	BugChill	Co	SEQ
81	Spicy Step	Co	SPLIT
82	Ice	Co	SEQ
83	Hip-Str	Co	SPLIT
84	Raggamuff	Co	SPLIT
85	HardTrance	Co	SEQ
86	Deep House	Co	SPLIT
87	SpaceRnB	Co	SPLIT
88	Reykjavik	Co	SEQ
89	Under Sea	Me	MOTION
90	GitBallad	Gt	A.GTR
91	MistyLands	Co	SEQ
92	Glitchit	Co	SPLIT
93	Aztecan	Co	SEQ
94	VntgeRock	Co	SPLIT
95	magellan	Co	SPLIT
96	Deep Space	Me	MOTION
97	X-Circuit	Co	SPLIT
98	5th Dream	Co	SEQ
99	Buddha	Co	SPLIT
100	BuzzFunk	Co	SPLIT
101	N-tranzd	Co	SPLIT
102	Garage	Co	SPLIT
103	PapaGroove	Co	SPLIT
104	nanospace	Co	SEQ
105	Simmer	Co	SEQ
106	The Piper	Co	SPLIT
107	Illusions	Co	SPLIT
108	Dreampulse	Co	SEQ
109	Juliana's	Co	SEQ
110	CountryRck	Co	SPLIT
111	Hindu	Co	SPLIT
112	Devilish	Me	MOTION
113	NuJazz Gig	Co	SPLIT
114	Helsinki	Co	SEQ
115	LiquidBeat	Co	SPLIT
116	Trip Hop	Co	SPLIT
117	tooltrance	Co	SEQ
118	GodMorning	Co	SPLIT
119	R&B 2003	Co	SPLIT
120	Happy Hour	Co	SEQ
121	Venus Flai	Co	SEQ
122	SmallBand	Gt	A.GTR
123	Galilean	Co	SEQ
124	network	Co	SEQ
125	Blpzkrieg	Co	SEQ
126	9Ft.Hammrz	Co	SPLIT
127	Istanbul	Co	SEQ
128	Iceberg	Pd	CHOIR

ПОЛЬЗОВАТЕЛЬСКИЙ 2 (USER2)

Номер	Наименование исполнительского стиля	Категория исполнительского стиля	Подкатегория
1	DreamGrand	Kb	OTHER
2	Oscar	Me	MOTION
3	Rubbish	Co	SPLIT
4	del Mar	Co	SEQ
5	DarkGroove	Co	SPLIT
6	Soft Game	Me	MOTION
7	80thBallad	Kb	E.PIANO
8	San Juan	Co	SPLIT
9	Sinfony	St	ENSEM.
10	Sparkles	Pd	SOFT
11	Seconds	Co	SEQ
12	SuperCity	Co	SPLIT
13	Pink Lead	Co	SPLIT
14	SimplWorld	Co	SEQ
15	Full Moon	Co	SEQ
16	horrifye	Se	SYNTH
17	Romance	Ap	A PIANO
18	Dualism	Pd	BRIGHT
19	GoodFeel	Co	SPLIT
20	Clouds	Co	SPLIT
21	FunkJam	Co	SPLIT
22	Meiosis	Pd	SOFT
23	PianoBalld	Co	SPLIT
24	Broadcast	Co	SPLIT
25	Emotional	St	ENSEM.
26	Bell Pad	Pd	BRIGHT
27	ClapBeat	Co	SEQ
28	D&B Combo	Co	SPLIT
29	Soldier	Co	SPLIT
30	r.p.m.	Co	SEQ
31	Tranceform	Co	SEQ
32	Sepulchre	Me	MOTION
33	Grand+DX	Ap	OTHER
34	5thPad	Pd	SOFT
35	Amitabha	Co	SPLIT
36	Morning	Co	SPLIT
37	Cognitive	Co	SPLIT
38	Kaleixope	Me	MOTION
39	DreamBlld	Co	SEQ
40	SpnishSmba	Co	SPLIT
41	OrchtrlBRS	Br	SECTION
42	Horizon	Pd	BRIGHT
43	Relax EP	Co	SEQ
44	DiscoWah	Co	SPLIT
45	Sheherzade	Ld	SOFT
46	New Lover	Co	SEQ
47	Chordmaker	Co	SEQ
48	Movie	Me	MOTION
49	BigBallad	Ap	OTHER
50	Analogue	Pd	SOFT
51	Cali Soul	Co	SPLIT
52	Beard 70s	Co	SPLIT
53	RareGroove	Co	SPLIT
54	Rainforest	Cp	MALLET
55	1984	Co	SPLIT
56	JazzCombo	Co	SPLIT
57	DynmcSectn	St	ENSEM.
58	FarEast	Me	MOTION
59	LunarBeats	Co	SPLIT
60	SoulNight	Co	SPLIT
61	Dream T	Ld	SOFT
62	LatinTech	Co	SPLIT
63	ToTheMoon	Co	SEQ
64	Antimatter	Me	MOTION

Номер	Наименование исполнительского стиля	Категория исполнительского стиля	Подкатегория
65	LoveAffair	Kb	E.PIANO
66	CreepnWorm	Pd	BRIGHT
67	Galaxion	Co	SPLIT
68	AltnaBalld	Co	SPLIT
69	Chillin	Co	SPLIT
70	Spring	Pd	SOFT
71	SoftAnalog	Co	SPLIT
72	Latinizer	Co	SPLIT
73	BigStrings	St	ENSEM.
74	SprngBreez	Pd	SOFT
75	iXacto	Co	SEQ
76	My House	Co	SPLIT
77	SlowFinger	Co	SPLIT
78	Sonic Wave	Me	MOTION
79	harmojam	Me	MOTION
80	B-Zone	Pd	BRIGHT
81	2 Manuals	Or	ELEC.
82	Super Dark	Pd	SOFT
83	HipBallad	Co	SPLIT
84	BaliDream	Co	SEQ
85	AnlogPower	Co	SPLIT
86	Relaxation	Co	SEQ
87	SlowBrew	Co	SPLIT
88	BluesCruis	Co	SPLIT
89	OctaBrass	Br	SECTION
90	NyloMood	Gt	A.GTR
91	Scientific	Co	SEQ
92	DJ Love	Co	SPLIT
93	Fifth Rite	Ld	SOFT
94	Anthem	Co	SPLIT
95	Oslo	Co	SEQ
96	FinalEvent	Me	MOTION
97	Pop Bells	Cp	BELL
98	Gentle	Pd	CHOIR
99	Balearic	Co	SPLIT
100	Dolcemente	Co	SPLIT
101	JazzMeistr	Co	SPLIT
102	GoodNight	Me	MOTION
103	Organic	Co	SPLIT
104	SambaMan	Co	SPLIT
105	BrassOff!	Br	SECTION
106	Crack	Pd	BRIGHT
107	New Retro	Co	SPLIT
108	POSE	Co	SPLIT
109	Mr.Wah Wah	Co	SPLIT
110	Smooveout	Co	SPLIT
111	Pulsewings	Co	SEQ
112	Psycho Vox	Me	MOTION
113	FullRock	Or	ELEC.
114	AnglBreath	Pd	SOFT
115	Top40	Co	SPLIT
116	Tape Ens	Co	SPLIT
117	Hop It	Co	SPLIT
118	X-Flange	Me	MOTION
119	Detroit	Co	SPLIT
120	CoolLounge	Co	SPLIT
121	Dynasty	Co	SPLIT
122	Voltage	Pd	CHOIR
123	Ethnotic	Co	SPLIT
124	LadeezNite	Co	SPLIT
125	Chill-Rds	Kb	E.PIANO
126	Play Boy !	Co	SPLIT
127	tranceroot	Co	SEQ
128	Provinces	Se	SYNTH

Категория эффекта		Наименование эффекта	ЖК дисплей	MIDI (16-ричное)		№			
				MSB	LSB	REV	CHO	InsA	InsB
	---	NO EFFECT	off	00	00	0	0		
	---	THRU	Thru	--	--			0	0
РЕВЕРБЕРАЦИЯ									
	REV	HALL 1	Hall 1	01	00	1	1	1	1
	REV	HALL 2	Hall 2	01	01	2	2	2	2
	REV	ROOM 1	Room 1	01	10	3	3	3	3
	REV	ROOM 2	Room 2	01	11	4	4	4	4
	REV	ROOM 3	Room 3	01	12	5	5	5	5
	REV	STAGE 1	Stage 1	01	20	6	6	6	6
	REV	STAGE 2	Stage 2	01	21	7	7	7	7
	REV	PLATE	Plate	01	30	8	8	8	8
	REV	WHITE ROOM	White Room	01	40	9			
	REV	TUNNEL	Tunnel	01	41	10			
	REV	BASEMENT	Basement	01	42	11			
	REV	CANYON	Canyon	01	43	12			
	REV	R3 HALL	R3 Hall	01	02	13			
	REV	R3 ROOM	R3 Room	01	13	14			
	REV	R3 PLATE	R3 Plate	01	31	15			
	REV	LARGE HALL	Large Hall	01	08	16			
	REV	MIDIUM HALL	Medium Hall	01	09	17			
	REV	WARM ROOM	Warm Room	01	18	18			
	REV	WOODY ROOM	Woody Room	01	19	19			
	REV	RICH PLATE	Rich Plate	01	38	20			
ЗАДЕРЖКА									
	DLY	DELAY L, C, R	Delay L,C,R	02	00		9	9	9
	DLY	DELAY L, R	Delay L,R	02	10		10	10	10
	DLY	DELAY L, R (Stereo)	Delay L,R St	02	18		11	11	11
	DLY	ECHO	Echo	02	20		12	12	12
	DLY	CROSS DELAY	Cross Delay	02	30		13	13	13
	DLY	CONTROL DELAY (MONO)	Ctrl Delay 1	02	40			14	14
	DLY	CONTROL DELAY (STEREO)	Ctrl Delay 2	02	48			15	15
	DLY	TEMPO DELAY (MONO)	TempDelay 1	02	50		14	16	16
	DLY	TEMPO DELAY (STEREO)	TempDelay 2	02	58		15	17	17
	DLY	TEMPO CROSS DELAY	TempoCrosDly	02	60		16	18	18
РАННЕЕ ОТРАЖЕНИЕ									
	ER	EARLY REFLECTION 1	Early Ref 1	03	00		17	19	19
	ER	EARLY REFLECTION 2	Early Ref 2	03	01		18	20	20
	ER	GATE REVERB	Gate Reverb	03	10		19	21	21
	ER	REVERSE GATE	Reverse Gate	03	20		20	22	22
KARAOKE									
	KAR	KARAOKE 1	Karaoke 1	04	00		21	23	23
	KAR	KARAOKE 2	Karaoke 2	04	01		22	24	24
	KAR	KARAOKE 3	Karaoke 3	04	02		23	25	25
ХОРУС									
	CHO	CHORUS 1	Chorus 1	05	00		24	26	26
	CHO	CHORUS 2	Chorus 2	05	01		25	27	27
	CHO	CHORUS 3	Chorus 3	05	02		26	28	28
	CHO	CHORUS 4	Chorus 4	05	08		27	29	29
	CHO	CHORUS 5	Chorus 5	05	09		28	30	30
	CHO	CELESTE 1	Celeste 1	05	10		29	31	31
	CHO	CELESTE 2	Celeste 2	05	11		30	32	32
	CHO	CELESTE 3	Celeste 3	05	12		31	33	33
	CHO	CELESTE 4	Celeste 4	05	18		32	34	34
	CHO	SYMPHONIC	Symphonic	05	20		33	35	35
	CHO	ENSEMBLE DETUNE	Ensemble	05	30		34	36	36
ФЛЭНЖЕР									
	FLG	FLANGER 1	Flanger 1	06	00		35	37	37
	FLG	FLANGER 2	Flanger 2	06	01		36	38	38
	FLG	FLANGER 3	Flanger 3	06	08		37	39	39
	FLG	V-FLANGER	V-Flanger	06	10		38	40	40
	FLG	VINTAGE FLANGER 1	VntgFlanger1	06	20		39	41	41
	FLG	VINTAGE FLANGER 2	VntgFlanger2	06	21		40	42	42
	FLG	VINTAGE FLANGER 3	VntgFlanger3	06	22		41	43	43
	FLG	TEMPO FLANGER	TempoFlanger	06	50		42	44	44
	FLG	DYNAMIC FLANGER	DynamFlanger	06	60			45	45
ФЭЙЗЕР									
	PHA	PHASER 1	Phaser 1	07	00		43	46	46
	PHA	PHASER 2	Phaser 2	07	08		44	47	47
	PHA	VINTAGE STEREO PHASER 1	VntgPhsr1 St	07	20		45	48	48
	PHA	VINTAGE STEREO PHASER 2	VntgPhsr2 St	07	21		46	49	49
	PHA	VINTAGE MONO PHASER 1	VntgPhsr1 Mn	07	30		47	50	50
	PHA	VINTAGE MONO PHASER 2	VntgPhsr2 Mn	07	31		48	51	51
	PHA	TEMPO PHASER	TempoPhaser	07	50		49	52	52
	PHA	DYNAMIC PHASER	DynamPhaser	07	60			53	53
МОДУЛЯЦИЯ									
	MOD	TREMOLO	Tremolo	08	00			54	54
	MOD	AUTO PAN	Auto Pan	08	10			55	55
	MOD	AUTO PAN2	Auto Pan 2	08	11			56	56
	MOD	ROTARY SPEAKER	Rotary SP 1	08	50			57	57
	MOD	DISTORTION+ROTARY SPEAKER	Dist+RotSp1	08	51			58	58
	MOD	OVERDRIVE+ROTARY SPEAKER	Odrv+RotSp1	08	52			59	59
	MOD	AMP SIM.+ROTARY SPEAKER	Amp +RotSp1	08	53			60	60
	MOD	2WAY ROTARY SPEAKER	Rotary Sp 2	08	60			61	61
	MOD	DISTORTION+2WAY ROTARY SPEAKER	Dist+RotSp2	08	61			62	62
	MOD	OVERDRIVE+2WAY ROTARY SPEAKER	Odrv+RotSp2	08	62			63	63
	MOD	AMP SIM.+2WAY ROTARY SPEAKER	Amp +RotSp2	08	63			64	64
	MOD	DUAL ROTOR SPEAKER1	Dual RotSp 1	08	70			65	65
	MOD	DUAL ROTOR SPEAKER2	Dual RotSp 2	08	71			66	66
	MOD	DUAL ROTOR SPEAKER3	Dual RotSp 3	08	72			67	67

Категория эффекта		Наименование эффекта	ЖК дисплей	MIDI (16-ричное)		№			
				MSB	LSB	REV	CHO	InsA	InsB
ДИСТОРШН									
	DST	DISTORTION	Distortion	09	00			68	68
	DST	COMP DISTORTION	Comp + Dist	09	01			69	69
	DST	V-DISTORTION	V-Distortion	09	10			70	70
	DST	OVERDRIVE	Overdrive	09	20			71	71
	DST	AMP SIMULATOR	AmpSimulator	09	30			72	72
	DST	AMP SIMULATOR2	AmpSim 2	09	31			73	73
	DST	DISTORTION+DELAY	Dist + Delay	09	40			74	74
	DST	OVERDRIVE+DELAY	Odrv + Delay	09	41			75	75
ДИНАМИКА									
	DYN	COMPRESSOR	Compressor	0A	00			76	76
	DYN	NOISE GATE	Noise Gate	0A	20			77	77
	DYN	COMP+DISTORTION+DELAY	Cmp+Dist+Dly	0A	40			78	78
	DYN	COMP+OVERDRIVE+DELAY	Cmp+Odrv+Dly	0A	41			79	79
	DYN	MULTI BAND COMP 1	MltBndComp 1	0A	50			80	80
	DYN	MULTI BAND COMP 2	MltBndComp 2	0A	51			81	81
ИЗМЕНЕНИЕ ВЫСОТЫ ТОНА									
	PCH	PITCH CHANGE 1	PitchChange1	0B	00			82	82
	PCH	PITCH CHANGE 2	PitchChange2	0B	01			83	83
WAH (ВАУ)									
	WAH	AUTO WAH	Auto Wah	0C	00			84	84
	WAH	AUTO WAH+DISTORTION	A.Wah+Dist	0C	01			85	85
	WAH	AUTO WAH+OVERDRIVE	A.Wah+Odrv	0C	02			86	86
	WAH	VINTAGE AUTO WAH 1	Vntg A.Wah1	0C	20			87	87
	WAH	VINTAGE AUTO WAH 2	Vntg A.Wah2	0C	21			88	88
	WAH	TOUCH WAH	Touch Wah	0C	10			89	89
	WAH	TOUCH WAH+DISTORTION	T.Wah+Dist	0C	11			90	90
	WAH	TOUCH WAH+OVERDRIVE	T.Wah+Odrv	0C	12			91	91
	WAH	VINTAGE TOUCH WAH 1	Vntg T.Wah1	0C	30			92	92
	WAH	VINTAGE TOUCH WAH 2	Vntg T.Wah2	0C	31			93	93
	WAH	WAH+DISTORTION+DELAY	Wah+Dist+Dly	0C	40			94	94
	WAH	WAH+OVERDRIVE+DELAY	Wah+Odrv+Dly	0C	41			95	95
LO-FI									
	L-F	LO-FI	Lo-Fi	0D	00			96	96
	L-F	LOW RESOLUTION	LoResolution	0D	10			97	97
	L-F	NOISY	Noisy	0D	20			98	98
	L-F	ATTACK LOFI	Attack LoFi	0D	30			99	99
	L-F	DIGITAL TURNTABLE	D.Turntable	0D	50			100	100
ТЕХНО									
	TEC	DIGITAL SCRATCH	D.Scratch	0E	00			101	101
	TEC	AUTO SYNTH	Auto Synth	0E	10			102	102
	TEC	TECH MODULATION	Tech Mod	0E	20			103	103
	TEC	JUMP	Jump	0E	30			104	104
	TEC	ISOLATOR	Isolator	0E	40			105	105
	TEC	SLICE	Slice	0E	50			106	106
РАЗНОЕ									
	MSC	3-BAND EQ	3 Band EQ	0F	00			107	107
	MSC	2-BAND EQ	2 Band EQ	0F	01			108	108
	MSC	HARMONIC ENHANCER	Enhancer	0F	10			109	109
	MSC	VOICE CANCEL	Voice Cancel	0F	20			110	110
	MSC	AMBIENCE	Ambience	0F	30			111	111
	MSC	TALKING MODULATOR	Talking Mod	0F	40			112	112
	MSC	BEAT CHANGE	Beat Change	0F	50			113	113
	MSC	RING MODULATOR	Ring Mod	0F	70			114	114
	MSC	DYNAMIC RING MODULATOR	DynamRingMod	0F	71			115	115
	MSC	DYNAMIC FILTER	DynamFilter	0F	78			116	116

Блок реверберации

HALL1 – PLATE, R3 HALL – R3 PLATE

№	Параметр	Диапазон	Значение	№ таблицы
01	Reverb Time	0.3s – 30.0s	(0 – 69)	4
02	Diffusion	0 – 10	(0 – 10)	
03	Initial Delay	0.1ms – 200.0ms	(0 – 127)	5
04	HPF Cutoff Frequency	20Hz – 8.0kHz	(0 – 52)	3
05	LPF Cutoff Frequency	1.0kHz – 20.0kHz	(34 – 60)	3
11	Reverb Delay	0.1ms – 200.0ms	(0 – 127)	5
12	Density	0 – 4	(0 – 4)	
13	ER / Rev Balance	E63>R – E=R – E<R63	(1 – 127)	
14	Feedback High Damp	0.1 – 1.0	(1 – 10)	
15	Feedback Level	-63 – +63	(1 – 127)	

WHITE ROOM – CANYON

№	Параметр	Диапазон	Значение	№ таблицы
01	Reverb Time	0.3s – 30.0s	(0 – 69)	4
02	Diffusion	0 – 10	(0 – 10)	
03	Initial Delay	0.1ms – 200.0ms	(0 – 127)	5
04	HPF Cutoff Frequency	20Hz – 8.0kHz	(0 – 52)	3
05	LPF Cutoff Frequency	1.0kHz – 20.0kHz	(34 – 60)	3
06	Width	0.5m – 30.2m	(0 – 104)	11
07	Height	0.5m – 30.2m	(0 – 104)	11
08	Depth	0.5m – 30.2m	(0 – 104)	11
09	Wall Vary	0 – 30	(0 – 30)	
11	Reverb Delay	0.1ms – 200.0ms	(0 – 127)	5
12	Density	0 – 4	(0 – 4)	
13	ER / Rev Balance	E63>R – E=R – E<R63	(1 – 127)	
14	Feedback High Damp	0.1 – 1.0	(1 – 10)	
15	Feedback Level	-63 – +63	(1 – 127)	

LARGE HALL – RICH PLATE

№	Параметр	Диапазон	Значение	№ таблицы
01	Reverb Time	0.3s – 18.0s/10.0s/26.0s	(0 – 69)	25/26/27
02	Diffusion	0 – 10	(0 – 10)	
03	Initial Delay	0.1ms – 200.0ms	(0 – 127)	5
04	HPF Cutoff Frequency	20Hz – 8.0kHz	(0 – 52)	3
05	LPF Cutoff Frequency	1.0kHz – 20.0kHz	(34 – 60)	3
06	Room Size	0 – 31	(0 – 31)	
07	High Ratio	0.1 – 1.0	(1 – 10)	
08	Low Ratio	0.1 – 1.4	(1 – 14)	
09	Decay	0 – 63	(0 – 63)	

Large Hall, Medium Hall: (Таблица № 25)
Warm Room, Woody Room: (Таблица № 26)
Rich Plate: (Таблица № 27)
Подробнее см. таблицу назначения эффектов.

Блок хоруса, Вставки A, B

THRU

HALL1 – PLATE

№	Параметр	Диапазон	Значение	№ таблицы
01	Reverb Time	0.3s – 30.0s	(0 – 69)	4
02	Diffusion	0 – 10	(0 – 10)	
03	Initial Delay	0.1ms – 99.3ms	(0 – 63)	5
04	HPF Cutoff Frequency	20Hz – 8.0kHz	(0 – 52)	3
05	LPF Cutoff Frequency	1.0kHz – 20.0kHz	(34 – 60)	3
10	Dry / Wet Balance	D63>W – D=W – D<W63	(1 – 127)	
11	Reverb Delay	0.1ms – 99.3ms	(0 – 63)	5
12	Density	0 – 4	(0 – 4)	
13	ER / Rev Balance	E63>R – E=R – E<R63	(1 – 127)	
14	Feedback High Damp	0.1 – 1.0	(1 – 10)	
15	Feedback Level	-63 – +63	(1 – 127)	

DELAY L, C, R

№	Параметр	Диапазон	Значение	№ таблицы
01	Delay Time L	0.1ms – 1638.3ms	(1 – 16383)	
02	Delay Time R	0.1ms – 1638.3ms	(1 – 16383)	
03	Delay Time C	0.1ms – 1638.3ms	(1 – 16383)	
04	Feedback Time	0.1ms – 1638.3ms	(1 – 16383)	
05	Feedback Level	-63 – +63	(1 – 127)	
06	Delay Level C	0 – 127	(0 – 127)	
07	Feedback High Damp	0.1 – 1.0	(1 – 10)	
10	Dry / Wet Balance	D63>W – D=W – D<W63	(1 – 127)	
13	EQ Low Frequency	32Hz – 2.0kHz	(4 – 40)	3
14	EQ Low Gain	-12dB – +12dB	(52 – 76)	
15	EQ High Frequency	500Hz – 16.0kHz	(28 – 58)	3
16	EQ High Gain	-12dB – +12dB	(52 – 76)	

DELAY L, R

№	Параметр	Диапазон	Значение	№ таблицы
01	Delay Time L	0.1ms – 1638.3ms	(1 – 16383)	
02	Delay Time R	0.1ms – 1638.3ms	(1 – 16383)	
03	Feedback Time 1	0.1ms – 1638.3ms	(1 – 16383)	
04	Feedback Time 2	0.1ms – 1638.3ms	(1 – 16383)	
05	Feedback Level	-63 – +63	(1 – 127)	
06	Feedback High Damp	0.1 – 1.0	(1 – 10)	
10	Dry / Wet Balance	D63>W – D=W – D<W63	(1 – 127)	
13–16: То же, что и для выделенных серым параметров в таблице DELAY L, C, R выше				

DELAY L, R (Stereo)

№	Параметр	Диапазон	Значение	№ таблицы
01	Delay Time L	0.1ms – 1638.3ms	(1 – 16383)	
02	Delay Time R	0.1ms – 1638.3ms	(1 – 16383)	
03	Feedback Time L	0.1ms – 1638.3ms	(1 – 16383)	
04	Feedback Time R	0.1ms – 1638.3ms	(1 – 16383)	
05	Feedback Level	-63 – +63	(1 – 127)	
06	Feedback High Damp	0.1 – 1.0	(1 – 10)	
10	Dry / Wet Balance	D63>W – D=W – D<W63	(1 – 127)	
13–16: То же, что и для выделенных серым параметров в таблице DELAY L, C, R выше				

ECHO

№	Параметр	Диапазон	Значение	№ таблицы
01	Delay Time L1	0.1ms – 1638.3ms	(1 – 16383)	
02	Feedback Level L	-63 – +63	(1 – 127)	
03	Delay Time R1	0.1ms – 1638.3ms	(1 – 16383)	
04	Feedback Level R	-63 – +63	(1 – 127)	
05	Feedback High Damp	0.1 – 1.0	(1 – 10)	
06	Delay Time L2	0.1ms – 1638.3ms	(1 – 16383)	
07	Delay Time R2	0.1ms – 1638.3ms	(1 – 16383)	
08	Delay Level 2	0 – 127	(0 – 127)	
10	Dry / Wet Balance	D63>W – D=W – D<W63	(1 – 127)	
13–16: То же, что и для выделенных серым параметров в таблице DELAY L, C, R выше				

CROSS DELAY

№	Параметр	Диапазон	Значение	№ таблицы
01	Delay Time L>R	0.1ms – 1638.3ms	(1 – 16383)	
02	Delay Time R>L	0.1ms – 1638.3ms	(1 – 16383)	
03	Feedback Level	-63 – +63	(1 – 127)	
04	Input Select	L, R, L&R	(0 – 2)	
05	Feedback High Damp	0.1 – 1.0	(1 – 10)	
10	Dry / Wet Balance	D63>W – D=W – D<W63	(1 – 127)	
13–16: То же, что и для выделенных серым параметров в таблице DELAY L, C, R выше				

CONTROL DELAY 1 (MONO)

№	Параметр	Диапазон	Значение	№ таблицы
01	Delay Time	0.1ms – 1486.0ms	(1 – 14860)	
02	Delay Transition Rate	1 – 48	(1 – 48)	
03	Feedback Level	-63 – +63	(1 – 127)	
04	Feedback High Damp	0.1 – 1.0	(1 – 10)	
05	Delay Time Offset	0 – 127	(0 – 127)	
06-09: То же, что и для выделенных серым параметров в таблице DELAY L, C, R выше				
10	Dry / Wet Balance	D63>W – D=W – D<W63	(1 – 127)	
11	Control Type	normal, scratch	(0 – 1)	

CONTROL DELAY 2 (STEREO)

№	Параметр	Диапазон	Значение	№ таблицы
01	Delay Time	0.1ms – 1486.0ms	(1 – 14860)	
02	Delay transition rate	1 – 48	(1 – 48)	
03	Feedback Level	-63 – +63	(1 – 127)	
04	Feedback High Damp	0.1 – 1.0	(1 – 10)	
05	Delay Time Offset	0 – 127	(0 – 127)	
06-09: То же, что и для выделенных серым параметров в таблице DELAY L, C, R на стр. 28.				
10	Dry / Wet Balance	D63>W – D=W – D<W63	(1 – 127)	
11	Control Type	normal, scratch	(0 – 1)	

TEMPO DELAY 1 (MONO)

№	Параметр	Диапазон	Значение	№ таблицы
01	Delay Time	32nd/3 – 4thx6	(0 – 19)	14
02	Feedback Level	-63 – +63	(1 – 127)	
03	Feedback High Dump	0.1 – 1.0	(1 – 10)	
04	L/R Diffusion	-63ms – +63ms	(1 – 127)	
05	Lag	-63ms – +63ms	(1 – 127)	
10	Dry/Wet	D63>W – D=W – D<W63	(1 – 127)	
13	EQ Low Frequency	32Hz – 2.0kHz	(4 – 40)	3
14	EQ Low Gain	-12dB – +12dB	(52 – 76)	
15	EQ High Frequency	500Hz – 16.0kHz	(28 – 58)	3
16	EQ High Gain	-12dB – +12dB	(52 – 76)	

TEMPO DELAY 2 (STEREO)

№	Параметр	Диапазон	Значение	№ таблицы
01	Delay Time	32nd/3 – 4thx6	(0 – 19)	14
02	Feedback Level	-63 – +63	(1 – 127)	
03	Feedback High Dump	0.1 – 1.0	(1 – 10)	
04	L/R Diffusion	-63ms – +63ms	(1 – 127)	
05	Lag	-63ms – +63ms	(1 – 127)	
10	Dry/Wet	D63>W – D=W – D<W63	(1 – 127)	
13	EQ Low Frequency	32Hz – 2.0kHz	(4 – 40)	3
14	EQ Low Gain	-12dB – +12dB	(52 – 76)	
15	EQ High Frequency	500Hz – 16.0kHz	(28 – 58)	3
16	EQ High Gain	-12dB – +12dB	(52 – 76)	

TEMPO CROSS DELAY

№	Параметр	Диапазон	Значение	№ таблицы
01	Delay Time L>R	32nd/3 – 4thx6	(0 – 19)	14
02	Delay Time R>L	32nd/3 – 4thx6	(0 – 19)	14
03	Feedback Level	-63 – +63	(1 – 127)	
04	Input Select	L, R, L&R	(0 – 2)	
05	Feedback High Dump	0.1 – 1.0	(1 – 10)	
06	Lag	-63ms – +63ms	(1 – 127)	
10	Dry/Wet	D63>W – D=W – D<W63	(1 – 127)	
13	EQ Low Frequency	32Hz – 2.0kHz	(4 – 40)	3
14	EQ Low Gain	-12dB – +12dB	(52 – 76)	
15	EQ High Frequency	500Hz – 16.0kHz	(28 – 58)	3
16	EQ High Gain	-12dB – +12dB	(52 – 76)	

EARLY REFLECTION1 – 2

№	Параметр	Диапазон	Значение	№ таблицы
01	Type	S-hall, L-hall, random, reverse, plate, spring	(0 – 5)	
02	Room Size	0.1 – 20.0	(0 – 127)	6
03	Diffusion	0 – 10	(0 – 10)	
04	Initial Delay	0.1ms – 200.0ms	(0 – 127)	5
05	Feedback Level	-63 – +63	(1 – 127)	
06	HPF Cutoff Frequency	20Hz – 8.0kHz	(0 – 52)	3
07	LPF Cutoff Frequency	1.0kHz – 20.0kHz	(34 – 60)	3
10	Dry / Wet Balance	D63>W – D=W – D<W63	(1 – 127)	
11	Liveness	0 – 10	(0 – 10)	
12	Density	0 – 3	(0 – 3)	
13	Feedback High Damp	0.1 – 1.0	(1 – 10)	

GATE REVERB
REVERSE GATE

№	Параметр	Диапазон	Значение	№ таблицы
01	Type	type-A, type-B	(0 – 1)	
02–13: То же, что и для «EARLY REFLECTION1».				

KARAOKE1 – 3

№	Параметр	Диапазон	Значение	№ таблицы
01	Delay Time	0.1ms – 400.0ms	(0 – 127)	7
02	Feedback Level	-63 – +63	(1 – 127)	
03	HPF Cutoff Frequency	20Hz – 8.0kHz	(0 – 52)	3
04	LPF Cutoff Frequency	1.0kHz – 20.0kHz	(34 – 60)	3
10	Dry / Wet Balance	D63>W – D=W – D<W63	(1 – 127)	
11	Density	0 – 3	(0 – 3)	

CHORUS1 – 5
CELESTE1 – 4

№	Параметр	Диапазон	Значение	№ таблицы
01	LFO Speed	0.0Hz – 39.70Hz	(0 – 127)	1
02	LFO Depth	0 – 127	(0 – 127)	
03	Feedback Level	-63 – +63	(1 – 127)	
04	Delay Offset	0.0ms – 50.0ms	(0 – 127)	2
06-09: То же, что и для выделенных серым параметров в таблице DELAY L, C, R на стр. 28.				
10	Dry / Wet Balance	D63>W – D=W – D<W63	(1 – 127)	
11	EQ Mid Frequency	100Hz – 10.0kHz	(14 – 54)	3
12	EQ Mid Gain	-12dB – +12dB	(52 – 76)	
13	EQ Mid Width	0.1 – 12.0	(1 – 120)	
15	Input Mode	mono/stereo	(0 – 1)	

SYMPHONIC

№	Параметр	Диапазон	Значение	№ таблицы
01	LFO Speed	0.0Hz – 39.70Hz	(0 – 127)	1
02	LFO Depth	0 – 127	(0 – 127)	
03	Delay Offset	0.0ms – 50.0ms	(0 – 127)	2
06-09: То же, что и для выделенных серым параметров в таблице DELAY L, C, R на стр. 28.				
10	Dry / Wet Balance	D63>W – D=W – D<W63	(1 – 127)	
11	EQ Mid Frequency	100Hz – 10.0kHz	(14 – 54)	3
12	EQ Mid Gain	-12dB – +12dB	(52 – 76)	
13	EQ Mid Width	0.1 – 12.0	(1 – 120)	

ENSEMBLE DETUNE

№	Параметр	Диапазон	Значение	№ таблицы
01	Detune	-50cent – +50cent	(14 – 114)	
02	Initial Delay Lch	0.0ms – 50.0ms	(0 – 127)	2
03	Initial Delay Rch	0.0ms – 50.0ms	(0 – 127)	2
10	Dry / Wet Balance	D63>W – D=W – D<W63	(1 – 127)	
11–14: То же, что и для выделенных серым параметров в таблице DELAY L, C, R на стр. 28.				

FLANGER1 – 3

№	Параметр	Диапазон	Значение	№ таблицы
01	LFO Speed	0.0Hz – 39.70Hz	(0 – 127)	1
02	LFO Depth	0 – 127	(0 – 127)	
03	Feedback Level	-63 – +63	(1 – 127)	
04	Delay Offset	0.0ms – 50.0ms	(0 – 127)	2
06-09: То же, что и для выделенных серым параметров в таблице DELAY L, C, R на стр. 28.				
10	Dry / Wet Balance	D63>W – D=W – D<W63	(1 – 127)	
11	EQ Mid Frequency	100Hz – 10.0kHz	(14 – 54)	3
12	EQ Mid Gain	-12dB – +12dB	(52 – 76)	
13	EQ Mid Width	0.1 – 12.0	(1 – 120)	
14	LFO Phase Difference	-180deg – +180deg	(4 – 124)	

V-FLANGER

01	LFO Speed	0.0Hz – 39.70Hz	(0 – 127)	1
02	LFO Depth	0 – 127	(0 – 127)	
03	LFO Wave	Triangle, Sine, Random	(0 – 2)	
04	Delay Offset	0.09 – 36.21ms	(0 – 139)	20
05	Feedback Level	-100 – +100%	(0 – 200)	
06-09: То же, что и для выделенных серым параметров в таблице DELAY L, C, R на стр. 28.				
10	Dry / Wet Balance	D63>W – D=W – D<W63	(1 – 127)	
11	EQ Mid Frequency	100Hz – 10.0kHz	(14 – 54)	3
12	EQ Mid Gain	-12dB – +12dB	(52 – 76)	
13	EQ Mid Width	0.1 – 12.0	(1 – 120)	
14	Modulation Phase	-180 – +180	(0 – 16)	21
15	Feedback High Damp	0.1 – 1.0	(1 – 10)	
16	Analog Feel	0 – 10	(0 – 10)	

VINTAGE FLANGER 1 – 3

№	Параметр	Диапазон	Значение	№ таблицы
01	Speed	0.040Hz – 10.00Hz	(0 – 235)	22
02	Manual	0 – 127	(0 – 127)	
03	Depth	0 – 127	(0 – 127)	
04	Feedback	0 – 127	(0 – 127)	
05	Type	1 – 3	(0 – 2)	
06	Spread	0 – 127	(0 – 127)	
07	Mix	0 – 127	(0 – 127)	
13	EQ Low Frequency	32Hz – 2.0kHz	(4 – 40)	3
14	EQ Low Gain	-12dB – +12dB	(52 – 76)	
15	EQ High Frequency	500Hz – 16.0kHz	(28 – 58)	3
16	EQ High Gain	-12dB – +12dB	(52 – 76)	

TEMPO FLANGER

№	Параметр	Диапазон	Значение	№ таблицы
01	LFO Speed	16th – 4thx8	(5 – 21)	14
02	LFO Depth	0 – 127	(0 – 127)	
03	Feedback Level	-63 – +63	(1 – 127)	
04	Delay Offset	0.0ms – 50.0ms	(0 – 127)	2
05	LFO Phase Reset	off (free run), KeyOnReset, SEQ Start Reset	(0 – 2)	
06	EQ Low Frequency	32Hz – 2.0kHz	(4 – 40)	3
07	EQ Low Gain	-12dB – +12dB	(52 – 76)	
08	EQ High Frequency	500Hz – 16.0kHz	(28 – 58)	3
09	EQ High Gain	-12dB – +12dB	(52 – 76)	
10	Dry / Wet Balance	D63>W – D=W – D<W63	(1 – 127)	
11	EQ Mid Frequency	100Hz – 10.0kHz	(14 – 54)	3
12	EQ Mid Gain	-12dB – +12dB	(52 – 76)	
13	EQ Mid Width	0.1 – 12.0	(1 – 120)	
14	LFO Phase Difference	-180deg – +180deg	(4 – 124)	

DYNAMIC FLANGER

№	Параметр	Диапазон	Значение	№ таблицы
01	Sensitivity	0 – 127	(0 – 127)	
02	Delay Time Offset	0 – 127	(0 – 127)	
03	Feedback Level	-63 – +63	(1 – 127)	
04	Attack Time	0.3ms – 227ms	(0 – 127)	17
05	Release Time	2.6ms – 2171ms	(0 – 127)	18
06	Release Curve	0 – 127	(0 – 127)	
07	Direction	up, down	(0 – 1)	
08	Dyna Threshold Level	0 – 127	(0 – 127)	
09	Dyna Level Offset	0 – 127	(0 – 127)	
10	Dry / Wet Balance	D63>W – D=W – D<W63	(1 – 127)	
13	EQ Low Frequency	32Hz – 2.0kHz	(4 – 40)	3
14	EQ Low Gain	-12dB – +12dB	(52 – 76)	
15	EQ High Frequency	500Hz – 16.0kHz	(28 – 58)	3
16	EQ High Gain	-12dB – +12dB	(52 – 76)	

PHASER1

№	Параметр	Диапазон	Значение	№ таблицы
01	LFO Speed	0.0Hz – 39.70Hz	(0 – 127)	1
02	LFO Depth	0 – 127	(0 – 127)	
03	Phase Shift Offset	0 – 127	(0 – 127)	
04	Feedback Level	-63 – +63	(1 – 127)	
06-09: То же, что и для выделенных серым параметров в таблице DELAY L, C, R на стр. 28.				
10	Dry / Wet Balance	D63>W – D=W – D<W63	(1 – 127)	
11	Stage	4 – 22	(4 – 22)	
12	Diffusion	mono/stereo	(0 – 1)	

PHASER2

№	Параметр	Диапазон	Значение	№ таблицы
01	LFO Speed	0.0Hz – 39.70Hz	(0 – 127)	1
02	LFO Depth	0 – 127	(0 – 127)	
03	Phase Shift Offset	0 – 127	(0 – 127)	
04	Feedback Level	-63 – +63	(1 – 127)	
06-09: То же, что и для выделенных серым параметров в таблице DELAY L, C, R на стр. 28.				
10	Dry / Wet Balance	D63>W – D=W – D<W63	(1 – 127)	
11	Stage	3 – 11	(3 – 11)	
13	LFO Phase Difference	-180deg – +180deg	(4 – 124)	

VINTAGE STEREO PHASER 1 – 2

№	Параметр	Диапазон	Значение	№ таблицы
01	Speed	0.100Hz – 10.00Hz	(0 – 252)	23
02	Manual	0 – 127	(0 – 127)	
03	Depth	0 – 127	(0 – 127)	
04	Feedback	0 – 127	(0 – 127)	
05	Stage	4, 6, 8, 10	(0 – 3)	
06	Mode	1, 2	(0 – 1)	
07	Color	0 – 127	(0 – 127)	
08	Spread	0 – 127	(0 – 127)	

Параметр Color недоступен при следующих обстоятельствах: если для Mode выбран вариант 1, а для Stage выбран вариант 4, 6 или 8 или если для Mode выбран вариант 2, а для Stage выбран вариант 4 или 10.

VINTAGE MONO PHASER 1 – 2

№	Параметр	Диапазон	Значение	№ таблицы
01	Speed	0.100Hz – 10.00Hz	(0 – 252)	23
02	Manual	0 – 127	(0 – 127)	
03	Depth	0 – 127	(0 – 127)	
04	Feedback	0 – 127	(0 – 127)	
05	Stage	4, 6, 8, 10, 12, 16	(0 – 5)	
06	Mode	1, 2	(0 – 1)	
07	Color	0 – 127	(0 – 127)	
13	EQ Low Frequency	32Hz – 2.0kHz	(4 – 40)	3
14	EQ Low Gain	-12dB – +12dB	(52 – 76)	
15	EQ High Frequency	500Hz – 16.0kHz	(28 – 58)	3
16	EQ High Gain	-12dB – +12dB	(52 – 76)	

Параметр Color недоступен при следующих обстоятельствах: если для Mode выбран вариант 1, а для Stage выбран вариант 4, 6, 12 или 16 или если для Mode выбран вариант 2, а для Stage выбран вариант 4 или 10.

TEMPO PHASER

№	Параметр	Диапазон	Значение	№ таблицы
01	LFO Speed	16th – 4thx8	(5 – 21)	14
02	LFO Depth	0 – 127	(0 – 127)	
03	Phase Shift Offset	0 – 127	(0 – 127)	
04	Feedback Level	-63 – +63	(1 – 127)	
05	LFO Phase Reset	off (free run), KeyOnReset, SEQ Start Reset	(0 – 2)	
06	EQ Low Frequency	32Hz – 2.0kHz	(4 – 40)	3
07	EQ Low Gain	-12dB – +12dB	(52 – 76)	
08	EQ High Frequency	500Hz – 16.0kHz	(28 – 58)	3
09	EQ High Gain	-12dB – +12dB	(52 – 76)	
10	Dry / Wet Balance	D63>W – D=W – D<W63	(1 – 127)	
11	Stage	3 – 11	(3 – 11)	
13	LFO Phase Difference	-180deg – +180deg	(4 – 124)	

DYNAMIC PHASER

№	Параметр	Диапазон	Значение	№ таблицы
01	Sensitivity	0 – 127	(0 – 127)	
02	Dyna Level Offset	0 – 127	(0 – 127)	
03	Feedback Level	-63 – +63	(1 – 127)	
04	Attack Time	0.3ms – 227ms	(0 – 127)	17
05	Release Time	2.6ms – 2171ms	(0 – 127)	18
06	Release Curve	0 – 127	(0 – 127)	
07	Direction	up, down	(0 – 1)	
08	Dyna Threshold Level	0 – 127	(0 – 127)	
10	Dry / Wet Balance	D63>W – D=W – D<W63	(1 – 127)	
11	Stage	4, 5, 6	(4 – 6)	
13	EQ Low Frequency	32Hz – 2.0kHz	(4 – 40)	3
14	EQ Low Gain	-12dB – +12dB	(52 – 76)	
15	EQ High Frequency	500Hz – 16.0kHz	(28 – 58)	3
16	EQ High Gain	-12dB – +12dB	(52 – 76)	

TREMOLO

№	Параметр	Диапазон	Значение	№ таблицы
01	LFO Speed	0.0Hz – 39.70Hz	(0 – 127)	1
02	AM Depth	0 – 127	(0 – 127)	
03	PM Depth	0 – 127	(0 – 127)	
06-09: То же, что и для выделенных серым параметров в таблице DELAY L, C, R на стр. 28.				
11	EQ Mid Frequency	100Hz – 10.0kHz	(14 – 54)	3
12	EQ Mid Gain	-12dB – +12dB	(52 – 76)	
13	EQ Mid Width	0.1 – 12.0	(1 – 120)	
14	LFO Phase Difference	-180deg – +180deg	(4 – 124)	
15	Input Mode	mono/stereo	(0 – 1)	

AUTO PAN

№	Параметр	Диапазон	Значение	№ таблицы
01	LFO Speed	0.0Hz – 39.70Hz	(0 – 127)	1
02	L/R Depth	0 – 127	(0 – 127)	
03	F/R Depth	0 – 127	(0 – 127)	
04	PAN Direction	L<>R, L>>R, L<<R, Lturn, Rturn, L/R	(0 – 5)	
06-09: То же, что и для выделенных серым параметров в таблице DELAY L, C, R на стр. 28.				
11	EQ Mid Frequency	100Hz – 10.0kHz	(14 – 54)	3
12	EQ Mid Gain	-12dB – +12dB	(52 – 76)	
13	EQ Mid Width	0.1 – 12.0	(1 – 120)	

AUTO PAN2

№	Параметр	Диапазон	Значение	№ таблицы
01	LFO Speed	0.0Hz – 39.70Hz	(0 – 127)	1
02	L/R Depth	0 – 127	(0 – 127)	
03	F/R Depth	0 – 127	(0 – 127)	
04	PAN direction	L<>R, L>>R, L<<R, Lturn, Rturn, L/R	(0 – 5)	
02	LFO Wave	0 – 28	(0 – 28)	
06	EQ Low Frequency	32Hz – 2.0kHz	(4 – 40)	3
07	EQ Low Gain	-12dB – +12dB	(52 – 76)	
08	EQ High Frequency	500Hz – 16.0kHz	(28 – 58)	3
09	EQ High Gain	-12dB – +12dB	(52 – 76)	
11	EQ Mid Frequency	100Hz – 10.0kHz	(14 – 54)	3
12	EQ Mid Gain	-12dB – +12dB	(52 – 76)	
13	EQ Mid Width	0.1 – 12.0	(1 – 120)	
15	Input Mode	Mono/Stereo	(0 – 1)	

ROTARY SPEAKER

№	Параметр	Диапазон	Значение	№ таблицы
01	LFO Speed	0.0Hz – 39.70Hz	(0 – 127)	1
02	LFO Depth	0 – 127	(0 – 127)	
06-09: То же, что и для выделенных серым параметров в таблице DELAY L, C, R на стр. 28.				
10	Dry / Wet Balance	D63>W – D=W – D<W63	(1 – 127)	
11	EQ Mid Frequency	100Hz – 10.0kHz	(14 – 54)	3
12	EQ Mid Gain	-12dB – +12dB	(52 – 76)	
13	EQ Mid Width	0.1 – 12.0	(1 – 120)	

DISTORTION+ROTARY SPEAKER
OVERDRIVE+ROTARY SPEAKER

№	Параметр	Диапазон	Значение	№ таблицы
01	LFO Speed	0.0Hz – 39.70Hz	(0 – 127)	1
02	LFO Depth	0 – 127	(0 – 127)	
06	EQ Low Frequency	32Hz – 2.0kHz	(4 – 40)	3
07	EQ Low Gain	-12dB – +12dB	(52 – 76)	
08	EQ High Frequency	500Hz – 16.0kHz	(28 – 58)	3
09	EQ High Gain	-12dB – +12dB	(52 – 76)	
14	Dist. Drive	0 – 127	(0 – 127)	
15	Dist. LPF Cutoff Freq	1.0kHz – 20.0kHz	(34 – 60)	3
16	Dist. Output Level	0 – 127	(0 – 127)	

AMP SIMULATOR+ROTARY SPEAKER

№	Параметр	Диапазон	Значение	№ таблицы
01	LFO Speed	0.0Hz – 39.70Hz	(0 – 127)	1
02	LFO Depth	0 – 127	(0 – 127)	
03	AMP Type	off, stack, combo, tube	(0 – 3)	
06	EQ Low Frequency	32Hz – 2.0kHz	(4 – 40)	3
07	EQ Low Gain	-12dB – +12dB	(52 – 76)	
08	EQ High Frequency	500Hz – 16.0kHz	(28 – 58)	3
09	EQ High Gain	-12dB – +12dB	(52 – 76)	
14	AMP Drive	0 – 127	(0 – 127)	
15	AMP LPF Cutoff Freq	1.0kHz – 20.0kHz	(34 – 60)	3
16	AMP Output Level	0 – 127	(0 – 127)	

2WAY ROTARY SPEAKER

№	Параметр	Диапазон	Значение	№ таблицы
01	Rotor Speed	0.0Hz – 39.70Hz	(0 – 127)	1
02	Drive Low	0 – 127	(0 – 127)	
03	Drive High	0 – 127	(0 – 127)	
04	Low / High Balance	L63>H – L=H – L<H63	(1 – 127)	
06-09: То же, что и для выделенных серым параметров в таблице DELAY L, C, R на стр. 28.				
11	Divide Frequency	100Hz – 10.0kHz	(14 – 54)	3
12	Mic L-R Angle	0deg – 180deg	(0 – 60)	

DISTORTION+2WAY ROTARY SPEAKER
OVERDRIVE+2WAY ROTARY SPEAKER

№	Параметр	Диапазон	Значение	№ таблицы
01	Rotor Speed	0.0Hz – 39.70Hz	(0 – 127)	1
02	Drive Low	0 – 127	(0 – 127)	
03	Drive High	0 – 127	(0 – 127)	
04	Low/High Balance	L63>H – L=H – L<H63	(1 – 127)	
06	EQ Low Frequency	32Hz – 2.0kHz	(4 – 40)	3
07	EQ Low Gain	-12dB – +12dB	(52 – 76)	
08	EQ High Frequency	500Hz – 16.0kHz	(28 – 58)	3
09	EQ High Gain	-12dB – +12dB	(52 – 76)	
11	Divide Frequency	100Hz – 10.0kHz	(14 – 54)	3
12	Mic L-R Angle	0deg – 180deg	(0 – 60)	
14	Dist. Drive	0 – 127	(0 – 127)	
15	Dist. LPF Cutoff Freq	1.0kHz – 20.0kHz	(34 – 60)	3
16	Dist. Output Level	0 – 127	(0 – 127)	

AMP SIM.+2WAY ROTARY SPEAKER

№	Параметр	Диапазон	Значение	№ таблицы
01	Rotor Speed	0.0Hz – 39.70Hz	(0 – 127)	1
02	Drive Low	0 – 127	(0 – 127)	
03	Drive High	0 – 127	(0 – 127)	
04	Low/High Balance	L63>H – L=H – L<H63	(1 – 127)	
06	EQ Low Frequency	32Hz – 2.0kHz	(4 – 40)	3
07	EQ Low Gain	-12dB – +12dB	(52 – 76)	
08	EQ High Frequency	500Hz – 16.0kHz	(28 – 58)	3
09	EQ High Gain	-12dB – +12dB	(52 – 76)	
11	Divide Frequency	100Hz – 10.0kHz	(14 – 54)	3
12	Mic L-R Angle	0deg – 180deg	(0 – 60)	
13	AMP Type	off, stack, combo, tube	(0 – 3)	
14	AMP Drive	0 – 127	(0 – 127)	
15	AMP LPF Cutoff Freq	1.0kHz – 20.0kHz	(34 – 60)	3
16	AMP Output Level	0 – 127	(0 – 127)	

DUAL ROTOR SPEAKER 1

№	Параметр	Диапазон	Значение	№ таблицы
01	Rotor Speed Slow	0.0Hz – 2.65Hz	(0 – 63)	1
02	Horn Speed Slow	0.0Hz – 2.65Hz	(0 – 63)	1
03	Rotor Speed Fast	2.69Hz – 39.70Hz	(64 – 127)	1
04	Horn Speed Fast	2.69Hz – 39.70Hz	(64 – 127)	1
05	Slow-Fast Time of R	0 – 127	(0 – 127)	
06	Slow-Fast Time of H	0 – 127	(0 – 127)	
07	Drive Low	0 – 127	(0 – 127)	
08	Drive High	0 – 127	(0 – 127)	
09	Low/High Balance	L63>H – L=H – L<H63	(1 – 127)	
11	EQ Low Frequency	32Hz – 2.0kHz	(4 – 40)	3
12	EQ Low Gain	-12dB – +12dB	(52 – 76)	
13	EQ High Frequency	500Hz – 16.0kHz	(28 – 58)	3
14	EQ High Gain	-12dB – +12dB	(52 – 76)	
15	Mic L-R Angle	0deg – 180deg	(0 – 60)	
16	Speed Control	slow, fast	(0 – 1)	

DUAL ROTOR SPEAKER 2

№	Параметр	Диапазон	Значение	№ таблицы
01	Rotor Speed Slow	0.0Hz – 2.65Hz	(0 – 63)	1
02	Horn Speed Slow	0.0Hz – 2.65Hz	(0 – 63)	1
03	Rotor Speed Fast	2.69Hz – 39.70Hz	(64 – 127)	1
04	Horn Speed Fast	2.69Hz – 39.70Hz	(64 – 127)	1
05	Slow-Fast Time of R	0 – 127	(0 – 127)	
06	Slow-Fast Time of H	0 – 127	(0 – 127)	
07	Drive Low	0 – 127	(0 – 127)	
08	Drive High	0 – 127	(0 – 127)	
09	Low/High Balance	L63>H – L=H – L<H63	(1 – 127)	
11	EQ Low Frequency	32Hz – 2.0kHz	(4 – 40)	3
12	EQ Low Gain	-12dB – +12dB	(52 – 76)	
13	EQ High Frequency	500Hz – 16.0kHz	(28 – 58)	3
14	EQ High Gain	-12dB – +12dB	(52 – 76)	
15	Mic L-R Angle	0deg – 180deg	(0 – 60)	
16	Speed Control	slow, fast	(0 – 1)	

DUAL ROTOR SPEAKER 3

№	Параметр	Диапазон	Значение	№ таблицы
01	Rotor Speed Slow	0.0Hz – 2.65Hz	(0 – 63)	1
02	Horn Speed Slow	0.0Hz – 2.65Hz	(0 – 63)	1
03	Rotor Speed Fast	2.69Hz – 39.70Hz	(64 – 127)	1
04	Horn Speed Fast	2.69Hz – 39.70Hz	(64 – 127)	1
05	Slow-Fast Time of R	0 – 127	(0 – 127)	
06	Slow-Fast Time of H	0 – 127	(0 – 127)	
07	Drive Low	0 – 127	(0 – 127)	
08	Drive High	0 – 127	(0 – 127)	
09	Low/High Balance	L63>H – L=H – L<H63	(1 – 127)	
11	EQ Low Frequency	32Hz – 2.0kHz	(4 – 40)	3
12	EQ Low Gain	-12dB – +12dB	(52 – 76)	
13	EQ High Frequency	500Hz – 16.0kHz	(28 – 58)	3
14	EQ High Gain	-12dB – +12dB	(52 – 76)	
15	Mic L-R Angle	0deg – 180deg	(0 – 60)	
16	Speed Control	slow, fast	(0 – 1)	

DISTORTION
OVERDRIVE

№	Параметр	Диапазон	Значение	№ таблицы
01	Drive	0 – 127	(0 – 127)	
02	EQ Low Frequency	32Hz – 2.0kHz	(4 – 40)	3
03	EQ Low Gain	-12dB – +12dB	(52 – 76)	
04	LPF Cutoff Frequency	1.0kHz – 20.0kHz	(34 – 60)	3
05	Output Level	0 – 127	(0 – 127)	
07	EQ Mid Frequency	100Hz – 10.0kHz	(14 – 54)	3
08	EQ Mid Gain	-12dB – +12dB	(52 – 76)	
09	EQ Mid Width	0.1 – 12.0	(1 – 120)	
10	Dry / Wet Balance	D63>W – D=W – D<W63	(1 – 127)	
11	Edge	0 – 127	(0 – 127)	

COMP DISTORTION

№	Параметр	Диапазон	Значение	№ таблицы
01	Drive	0 – 127	(0 – 127)	
02	EQ Low Frequency	32Hz – 2.0kHz	(4 – 40)	3
03	EQ Low Gain	-12dB – +12dB	(52 – 76)	
04	LPF Cutoff Frequency	1.0kHz – 20.0kHz	(34 – 60)	3
05	Output Level	0 – 127	(0 – 127)	
07	EQ Mid Frequency	100Hz – 10.0kHz	(14 – 54)	3
08	EQ Mid Gain	-12dB – +12dB	(52 – 76)	
09	EQ Mid Width	0.1 – 12.0	(1 – 120)	
10	Dry / Wet Balance	D63>W – D=W – D<W63	(1 – 127)	
11	Edge	0 – 127	(0 – 127)	
12	Attack	1ms – 40ms	(0 – 19)	8
13	Release	10ms – 680ms	(0 – 15)	9
14	Threshold	-48dB – -6dB	(79 – 121)	
15	Ratio	1 – 20.0	(0 – 7)	10

V-DISTORTION

№	Параметр	Диапазон	Значение	№ таблицы
01	Over Drive	0 – 100%	(0 – 100)	
02	Device	Transistor, Vintage Tube, Distortion 1, Distortion 2, Fuzz	(0 – 4)	
03	Speaker Type	Flat, Stack, Combo, Twin, Radio, Megaphone	(0 – 5)	
04	Presence	-10 – 10	(0 – 20)	
05	Output Level	0 – 100%	(0 – 100)	
06	Delay Time L	0.1ms – 1638.3ms	(1 – 16383)	
07	Delay Time R	0.1ms – 1638.3ms	(1 – 16383)	
08	Feedback Time	0.1ms – 1638.3ms	(1 – 16383)	
09	Feedback Level	-63 – +63	(1 – 127)	
10	Dry/Wet Balance	D63>W – D=W – D<W63	(1 – 127)	
11	Delay Mix	0 – 127	(0 – 127)	
12	Feedback High Damp	0.1 – 1.0	(1 – 10)	

AMP SIMULATOR

№	Параметр	Диапазон	Значение	№ таблицы
01	Drive	0 – 127	(0 – 127)	
02	AMP Type	off, stack, combo, tube	(0 – 3)	
03	LPF Cutoff Frequency	1.0kHz – 20.0kHz	(34 – 60)	3
04	Output Level	0 – 127	(0 – 127)	
10	Dry / Wet Balance	D63>W – D=W – D<W63	(1 – 127)	
11	Edge	0 – 127	(0 – 127)	

AMP SIMULATOR2

№	Параметр	Диапазон	Значение	№ таблицы
01	Drive	0 – 127	(0 – 127)	
02	AMP type	off, stack, combo, tube, crunch, hi Gain, british	(0 – 6)	
03	LPF Cutoff Frequency	1.0kHz – 20.0kHz	(34 – 60)	3
04	Output Level	0 – 127	(0 – 127)	
10	Dry / Wet Balance	D63>W – D=W – D<W63	(1 – 127)	

DIST+DELAY
OVERDRIVE+DELAY

№	Параметр	Диапазон	Значение	№ таблицы
01	Delay Time L	0.1ms – 1638.3ms	(1 – 16383)	
02	Delay Time R	0.1ms – 1638.3ms	(1 – 16383)	
03	Delay Feedback Time	0.1ms – 1638.3ms	(1 – 16383)	
04	Delay Feedback Level	-63 – +63	(1 – 127)	
05	Delay mix	0 – 127	(0 – 127)	
06	Dist. Drive	0 – 127	(0 – 127)	
07	Dist Output Level	0 – 127	(0 – 127)	
08	Dist. EQ Low Gain	-12dB – +12dB	(52 – 76)	
09	Dist. EQ Mid Gain	-12dB – +12dB	(52 – 76)	
10	Dry / Wet Balance	D63>W – D=W – D<W63	(1 – 127)	

COMPRESSOR

01	Attack	1ms – 40ms	(0 – 19)	8
02	Release	10ms – 680ms	(0 – 15)	9
03	Threshold	-48dB – -6dB	(79 – 121)	
04	Ratio	1 – 20.0	(0 – 7)	10
05	Output Level	0 – 127	(0 – 127)	

NOISE GATE

№	Параметр	Диапазон	Значение	№ таблицы
01	Attack	1ms – 40ms	(0 – 19)	8
02	Release	10ms – 680ms	(0 – 15)	9
03	Threshold	-72dB – -30dB	(55 – 97)	
04	Output Level	0 – 127	(0 – 127)	

COMP+DIST+DELAY
COMP+ODRV+DELAY

№	Параметр	Диапазон	Значение	№ таблицы
01	Delay Time	0.1ms – 1638.3ms	(1 – 16383)	
02	Delay Feedback Level	-63 – +63	(1 – 127)	
03	Delay Mix	0 – 127	(0 – 127)	
04	Dist. Drive	0 – 127	(0 – 127)	
05	Dist Output Level	0 – 127	(0 – 127)	
06	Dist. EQ Low Gain	-12dB – +12dB	(52 – 76)	
07	Dist. EQ Mid Gain	-12dB – +12dB	(52 – 76)	
10	Dry / Wet Balance	D63>W – D=W – D<W63	(1 – 127)	
11	Comp. Attack	1ms – 40ms	(0 – 19)	8
12	Comp. Release	10ms – 680ms	(0 – 15)	9
13	Comp. Threshold	-48dB – -6dB	(79 – 121)	
14	Comp. Ratio	1 – 20.0	(0 – 7)	10

MULTI BAND COMP 1

№	Параметр	Диапазон	Значение	№ таблицы
1	Type	Normal, Low, Mid, High, Low/High, Low/Mid, Mid/High, Full Bit, Wild, Attacky, Low End, Hard, Basic	(0 – 12)	
2	Threshold Offset	-32 – +32	(32 – 96)	
3	Low Gain Offset	-63 – +63	(1 – 127)	
4	Mid Gain Offset	-63 – +63	(1 – 127)	
5	High Gain Offset	-63 – +63	(1 – 127)	

MULTI BAND COMP 2

№	Параметр	Диапазон	Значение	№ таблицы
1	Low Attack	1ms – 200ms	(0 – 29)	8
2	Low Release	10ms – 3000ms	(0 – 23)	9
3	Low Threshold	-54dB – -6dB	(73 – 121)	
4	Low Ratio	1 – 20.0	(0 – 7)	10
5	Low Gain	-∞ – +18dB	(0 – 55)	15
6	Mid Attack	1ms – 200ms	(0 – 29)	8
7	Mid Release	10ms – 3000ms	(0 – 23)	9
8	Mid Threshold	-54dB – -6dB	(73 – 121)	
9	Mid Ratio	1 – 20.0	(0 – 7)	10
10	Mid Gain	-∞ – +18dB	(0 – 55)	15
11	High Attack	1ms – 200ms	(0 – 29)	8
12	High Release	10ms – 3000ms	(0 – 23)	9
13	High Threshold	-54dB – -6dB	(73 – 121)	
14	High Ratio	1 – 20.0	(0 – 7)	10
15	High Gain	-∞ – +18dB	(0 – 55)	15
16	Divide Freq	0 – 89	(0 – 89)	16

PITCH CHANGE1
PITCH CHANGE2

№	Параметр	Диапазон	Значение	№ таблицы
01	Pitch	-24 – +24	(40 – 88)	
02	Initial Delay	0.1ms – 400.0ms	(0 – 127)	7
03	Fine1	-50 – +50	(14 – 114)	
04	Fine2	-50 – +50	(14 – 114)	
05	Feedback Level	-63 – +63	(1 – 127)	
10	Dry / Wet Balance	D63>W – D=W – D<W63	(1 – 127)	
11	PAN1	L63 – C – R63	(1 – 127)	
12	Output Level1	0 – 127	(0 – 127)	
13	PAN2	L63 – C – R63	(1 – 127)	
14	Output Level2	0 – 127	(0 – 127)	

Значения 03 (Fine 1) и 04 (Fine 2) для PITCH CHANGE2 выражаются в центах.

AUTO WAH

№	Параметр	Диапазон	Значение	№ таблицы
01	LFO Speed	0.0Hz – 39.70Hz	(0 – 127)	1
02	LFO Depth	0 – 127	(0 – 127)	
03	Cutoff Frequency Offset	0 – 127	(0 – 127)	
04	Resonance	1 – 12.0	(10 – 120)	
06-09: То же, что и для выделенных серым параметров в таблице DELAY L, C, R на стр. 28.				
10	Dry / Wet Balance	D63>W – D=W – D<W63	(1 – 127)	

AUTO WAH DISTORTION
AUTO WAH OVERDRIVE

№	Параметр	Диапазон	Значение	№ таблицы
01	LFO Speed	0.0Hz – 39.70Hz	(0 – 127)	1
02	LFO Depth	0 – 127	(0 – 127)	
03	Cutoff Frequency Offset	0 – 127	(0 – 127)	
04	Resonance	1 – 12.0	(10 – 120)	
06-09: То же, что и для выделенных серым параметров в таблице DELAY L, C, R на стр. 28.				
10	Dry / Wet Balance	D63>W – D=W – D<W63	(1 – 127)	
11	Drive	0 – 127	(0 – 127)	
12	Dist Low Gain	-12dB – +12dB	(52 – 76)	
13	Dist Mid Gain	-12dB – +12dB	(52 – 76)	
14	LPF Cutoff Frequency	1.0kHz – 20.0kHz	(34 – 60)	3
15	Output Level	0 – 127	(0 – 127)	

VINTAGE AUTO WAH 1 – 2

№	Параметр	Диапазон	Значение	№ таблицы
01	Speed	0.100Hz – 20.00Hz	(0 – 254)	24
02	Bottom	0 – 127	(0 – 127)	
03	Top	0 – 127	(0 – 127)	
04	Resonance Offset	-12.0 – +12.0	(40 – 88)	
05	LFO Wave	Sin, Trp	(0 – 1)	
06	Type	High, Mid, Low, Bass	(0 – 3)	
07	OverDrive	0.0dB – +40.0dB	(0 – 80)	
08	Output	-20.0dB – +10.0dB	(24 – 84)	
13	EQ Low Frequency	32Hz – 2.0kHz	(4 – 40)	3
14	EQ Low Gain	-12dB – +12dB	(52 – 76)	
15	EQ High Frequency	500Hz – 16.0kHz	(28 – 58)	3
16	EQ High Gain	-12dB – +12dB	(52 – 76)	

Если значение Bottom превышает значение Top, звук будет модулироваться, и доступно только значение Bottom.

TOUCH WAH

№	Параметр	Диапазон	Значение	№ таблицы
01	Sensitivity	0 – 127	(0 – 127)	
02	Cutoff Frequency Offset	0 – 127	(0 – 127)	
03	Resonance	1 – 12.0	(10 – 120)	
06-09: То же, что и для выделенных серым параметров в таблице DELAY L, C, R на стр. 28.				
10	Dry / Wet Balance	D63>W – D=W – D<W63	(1 – 127)	

TOUCH WAH+DISTORTION
TOUCH WAH+OVERDRIVE

01	Sensitivity	0 – 127	(0 – 127)	
02	Cutoff Frequency Offset	0 – 127	(0 – 127)	
03	Resonance	1 – 12.0	(10 – 120)	
06-09: То же, что и для выделенных серым параметров в таблице DELAY L, C, R на стр. 28.				
10	Dry / Wet Balance	D63>W – D=W – D<W63	(1 – 127)	
11	Drive	0 – 127	(0 – 127)	
12	Dist Low Gain	-12dB – +12dB	(52 – 76)	
13	Dist Mid Gain	-12dB – +12dB	(52 – 76)	
14	LPF Cutoff Frequency	1.0kHz – 20.0kHz	(34 – 60)	3
15	Output Level	0 – 127	(0 – 127)	

VINTAGE TOUCH WAH 1 – 2

№	Параметр	Диапазон	Значение	№ таблицы
01	Sensitivity	0 – 127	(0 – 127)	
02	Bottom	0 – 127	(0 – 127)	
03	Top	0 – 127	(0 – 127)	
04	Resonance Offset	-12.0 – +12.0	(40 – 88)	
05	Direction	up, down	(0 – 1)	
06	Type	High, Mid, Low, Bass	(0 – 3)	
07	OverDrive	0.0dB – +40.0dB	(0 – 80)	
08	Output	-20.0dB – +10.0dB	(24 – 84)	
11	Attack Offset	-5 – +5	(59 – 69)	
13	EQ Low Frequency	32Hz – 2.0kHz	(4 – 40)	3
14	EQ Low Gain	-12dB – +12dB	(52 – 76)	
15	EQ High Frequency	500Hz – 16.0kHz	(28 – 58)	3
16	EQ High Gain	-12dB – +12dB	(52 – 76)	

Если значение Bottom превышает значение Top, звук будет модулироваться, и доступно только значение Bottom.

WAH+DIST+DELAY
WAH+OVERDRIVE+DELAY

№	Параметр	Диапазон	Значение	№ таблицы
01	Delay Time	0.1ms – 1638.3ms	(1 – 16383)	
02	Delay Feedback Level	-63 – +63	(1 – 127)	
03	Delay mix	0 – 127	(0 – 127)	
04	Dist Drive	0 – 127	(0 – 127)	
05	Dist Output Level	0 – 127	(0 – 127)	
06	Dist EQ Low Gain	-12dB – +12dB	(52 – 76)	
07	Dist EQ Mid Gain	-12dB – +12dB	(52 – 76)	
10	Dry / Wet Balance	D63>W – D=W – D<W63	(1 – 127)	
11	Wah Sensitivity	0 – 127	(0 – 127)	
12	Wah Cutoff Frequency	0 – 127	(0 – 127)	
13	Wah Resonance	1 – 12.0	(10 – 120)	
14	Wah Release	10ms – 680ms	(52 – 67)	12

LO-FI

№	Параметр	Диапазон	Значение	№ таблицы
01	Sampling Freq Control	44.1kHz – 344Hz	(0 – 127)	13
02	Word Length	1 – 127	(1 – 127)	
03	Output Gain	-6dB – +36dB	(0 – 42)	
04	Pre-LPF Cutoff Frequency	63Hz – 20.0kHz	(10 – 60)	3
05	Filter Type	thru, Power Bass, Radio, Telephone, Clean, Low	(0 – 5)	
06	Pre-LPF Resonance	1 – 12.0	(10 – 120)	
07	Bit Assign	0 – 6	(0 – 6)	
08	Emphasis	off/on	(0 – 1)	
10	Dry / Wet Balance	D63>W – D=W – D<W63	(1 – 127)	
15	Input Mode	mono/stereo	(0 – 1)	

LOW RESOLUTION

№	Параметр	Диапазон	Значение	№ таблицы
01	Mod Depth	0 – 127	(0 – 127)	
02	Mod Delay Offset	1 – 127	(1 – 127)	
03	Mod Feedback	-63 – +63	(1 – 127)	
04	Resolution	1,1/2 – 1/128	(0 – 7)	
05	Mod Mix Balance	0 – 127	(0 – 127)	
06	Phase Inverse R	off, wet, wet+dry	(0 – 2)	
10	Dry/Wet Balance	D63>W – D=W – D<W63	(1 – 127)	

NOISY

№	Параметр	Диапазон	Значение	№ таблицы
01	Mod Depth	0 – 10	(0 – 10)	
02	Mod Speed	0 – 127	(0 – 127)	
03	Mod Feedback	-63 – +63	(1 – 127)	
04	Mod Mix Balance	1 – 127	(1 – 127)	
05	Drive	0 – 127	(0 – 127)	
06	AM Speed	0.00Hz – 39.7Hz	(0 – 127)	1
07	AM Depth	0 – 127	(0 – 127)	
08	LPF Frequency	1.0kHz – 20.0kHz	(34 – 60)	3
09	LPF Resonance	1.0 – 12.0	(10 – 120)	
10	Dry / Wet Balance	D63>W – D=W – D<W63	(1 – 127)	
11	EQ Frequency	100Hz – 10.0kHz	(14 – 54)	3
12	EQ Gain	-12 – +12dB	(52 – 76)	
13	EQ Width	1.0 – 12.0	(10 – 120)	

ATTACK LO-FI

№	Параметр	Диапазон	Значение	№ таблицы
01	Sensitivity	0 – 127	(0 – 127)	
02	Resolution	1, 1/2 – 1/32	(0 – 5)	
03	Peak Frequency	100Hz – 10.0kHz	(14 – 54)	3
04	LPF Frequency	1.0kHz – 20.0kHz	(34 – 60)	3
05	Flanger Speed	0.00Hz – 39.7Hz	(0 – 127)	1
06	Flanger LFO Wave	tri, sine, saw up, saw down	(0 – 3)	
07	Flanger Depth	0 – 127	(0 – 127)	
08	Flg Depth Ofst R	-63 – +63	(1 – 127)	
09	Flg Mix Balance	1 – 127	(1 – 127)	
10	Dry/Wet Balance	D63>W – D=W – D<W63	(1 – 127)	
11	Flanger Delay	0.1 – 650.0ms	(1 – 6500)	
12	Flg Delay Ofst R	0 – -884	(0 – 884)	
13	Flanger Feedback	-63 – +63	(1 – 127)	
14	Flanger FB Ofst R	-63 – +63	(1 – 127)	
15	Flanger FB HiDamp	0.1 – 1.0	(1 – 10)	
16	FB HiDamp Ofst R	-0.9 – +0.9	(1 – 19)	

DIGITAL TURNTABLE

№	Параметр	Диапазон	Значение	№ таблицы
01	Click Density	0 – 5	(0 – 5)	
02	Click Level	0 – 127	(0 – 127)	
03	Noise Tone	0 – 6	(0 – 6)	
04	Noise Mod Speed	0.00Hz – 39.7Hz	(0 – 127)	1
05	Noise Mod Depth	0 – 127	(0 – 127)	
06	Dry Send to Noise	0 – 127	(0 – 127)	
07	Noise LPF Freq	1.0kHz – 20.0kHz	(34 – 60)	3
08	Noise LPF Q	1.0 – 12.0	(10 – 120)	
09	Noise Level	0 – 127	(0 – 127)	
11	Dry Level	0 – 127	(0 – 127)	
12	Dry LPF Frequency	1.0kHz – 20.0kHz	(34 – 60)	3

DIGITAL SCRATCH

№	Параметр	Диапазон	Значение	№ таблицы
01	Input Level	0 – 127	(0 – 127)	
02	Initial Delay	0.1 – 460.0ms	(1 – 4600)	
03	Scratch Speed	1 – 127	(1 – 127)	
04	Scratch Depth	0 – 127	(0 – 127)	
05	Auto Pan Speed	0.00Hz – 39.7Hz	(0 – 127)	1
06	Auto Pan Depth	0 – 127	(0 – 127)	
07	EQ Frequency	100Hz – 10.0kHz	(14 – 54)	3
08	EQ Gain	-12 – +12dB	(52 – 76)	
09	EQ Width	1.0 – 12.0	(10 – 120)	
10	Dry / Wet Balance	D63>W – D=W – D<W63	(1 – 127)	
11	HPF Frequency	20Hz – 8.0kHz	(0 – 52)	3

AUTO SYNTH

№	Параметр	Диапазон	Значение	№ таблицы
01	Mod Speed	0 – 127	(0 – 127)	
02	Mod Wave Type	typeA, typeB, typeC, typeD	(0 – 3)	
03	Mod Depth	0 – 127	(0 – 127)	
04	Mod Depth Ofst R	-63 – +63	(1 – 127)	
05	HPF Frequency	20Hz – 8.0kHz	(0 – 52)	3
06	LPF Frequency	1.0kHz – 20.0kHz	(34 – 60)	3
07	Delay Time	0.1 – 370.0ms	(1 – 3700)	
08	Delay Time Ofst R	0 – 884	(0 – 884)	
09	Delay Level	0 – 127	(0 – 127)	
10	Dry Mix Level	0 – 127	(0 – 127)	
11	Feedback Level	-63 – +63	(1 – 127)	
12	FB Level Ofst R	-63 – +63	(1 – 127)	
13	AM Speed	0.00Hz – 39.7Hz	(0 – 127)	1
14	AM Wave	tri, sine, saw up, saw down	(0 – 3)	
15	AM Depth	0 – 127	(0 – 127)	
16	AM Inverse R	normal, inverse	(0 – 1)	

TECH MODULATION

№	Параметр	Диапазон	Значение	№ таблицы
01	Mod Speed	0 – 127	(0 – 127)	
02	Mod Depth	0 – 127	(0 – 127)	
03	Mod Gain	-12 – +12dB	(52 – 76)	
04	Mod Mix Balance	D63>W – D=W – D<W63	(1 – 127)	
05	Pre Mod HPF Freq	20Hz – 8.0kHz	(0 – 52)	3
06	Mod LPF Frequency	1.0kHz – 20.0kHz	(34 – 60)	3
07	Mod LPF Resonance	1.0 – 12.0	(10 – 120)	
08	Delay Time	0.1 – 740.0ms	(1 – 7400)	
09	Delay Time Ofst R	0 – 884	(0 – 884)	
10	Dry/Wet Balance	D63>W – D=W – D<W63	(1 – 127)	
11	Feedback Level	-63 – +63	(1 – 127)	
12	FB Level Ofst R	-63 – +63	(1 – 127)	
13	Feedback Hi Damp	0.1 – 1.0	(1 – 10)	
14	FB Hi Damp Ofst R	-0.9 – +0.9	(1 – 19)	

JUMP

№	Параметр	Диапазон	Значение	№ таблицы
01	Depth	0 – 127	(0 – 127)	
02	Speed	0 – 127	(0 – 127)	
03	Direction	L<>R, L>>R	(0 – 1)	
04	Type	typeA, typeB, typeC	(0 – 2)	
05	Jump Wave Type	typeA, typeB, typeC, typeD	(0 – 3)	
06	Resolution	1,1/2 – 1/256	(0 – 8)	
07	HPF Frequency	20Hz – 8.0kHz	(0 – 52)	3
08	LPF Frequency	1.0kHz – 20.0kHz	(34 – 60)	3
10	Dry / Wet Balance	D63>W – D=W – D<W63	(1 – 127)	

ISOLATOR

№	Параметр	Диапазон	Значение	№ таблицы
01	On/off SW	on, off	(0 – 1)	
02	Low Level	-64 – +63	(0 – 127)	
03	Mid Level	-64 – +63	(0 – 127)	
04	High Level	-64 – +63	(0 – 127)	
05	Low Mute	off/on	(0 – 1)	
06	Mid Mute	off/on	(0 – 1)	
07	High Mute	off/on	(0 – 1)	

SLICE

№	Параметр	Диапазон	Значение	№ таблицы
01	Divide Type	16th – 4th	(5 – 11)	14
02	Gate Time	0 – 100%	(0 – 100)	
03	Pan Aeg Type	A – E	(0 – 4)	
04	Pan Aeg Min Level	0 – 127	(0 – 127)	
05	Pan Depth	-63 – +63	(1 – 127)	
06	Divide Min Level	0 – 127	(0 – 127)	
07	Pan Type	A – J	(0 – 9)	
08	Drive	0 – 127	(0 – 127)	
09	AEG Phase	0 – 15 (x16th note)	(0 – 15)	
10	Dry/Wet Balance	D63>W – D=W – D<W63	(1 – 127)	
12	Set Slice Tempo	---	---	
13	EQ Low Frequency	32Hz – 2.0kHz	(4 – 40)	3
14	EQ Low Gain	-12dB – +12dB	(52 – 76)	
15	EQ High Frequency	500Hz – 16.0kHz	(28 – 58)	3
16	EQ High Gain	-12dB – +12dB	(52 – 76)	

3BAND EQ

№	Параметр	Диапазон	Значение	№ таблицы
01	EQ Low Gain	-12dB – +12dB	(52 – 76)	
02	EQ Mid Frequency	100Hz – 16.0kHz	(14 – 58)	3
03	EQ Mid Gain	-12dB – +12dB	(52 – 76)	
04	EQ Mid Width	0.1 – 12.0	(1 – 120)	
05	EQ High Gain	-12dB – +12dB	(52 – 76)	
06	EQ Low Frequency	50Hz – 2.0kHz	(8 – 40)	3
07	EQ High Frequency	500Hz – 16.0kHz	(28 – 58)	3
15	Input Mode	mono/stereo	(0 – 1)	

2BAND EQ

№	Параметр	Диапазон	Значение	№ таблицы
01-04: То же, что и для выделенных серым параметров в таблице DELAY L, C, R на стр. 28.				

HARMONIC ENHANCER

№	Параметр	Диапазон	Значение	№ таблицы
01	HPF Cutoff Frequency	500Hz – 16.0kHz	(28 – 58)	3
02	Drive	0 – 127	(0 – 127)	
03	Mix Level	0 – 127	(0 – 127)	

VOICE CANCELER

№	Параметр	Диапазон	Значение	№ таблицы
11	Low Adjust	0 – 26	(0 – 26)	
12	High Adjust	0 – 26	(0 – 26)	

AMBIENCE

№	Параметр	Диапазон	Значение	№ таблицы
01	Delay Time	0.0ms – 50.0ms	(0 – 127)	2
02	Wet Output Phase	normal/inverse	(0 – 1)	
06-09: То же, что и для выделенных серым параметров в таблице DELAY L, C, R на стр. 28.				
10	Dry / Wet Balance	D63>W – D=W – D<W63	(1 – 127)	

TALKING MODULATION

№	Параметр	Диапазон	Значение	№ таблицы
01	Vowel	a/i/u/e/o	(0 – 4)	
02	Move Speed	1 – 62	(1 – 62)	
03	Drive	0 – 127	(0 – 127)	
04	Output Level	0 – 127	(0 – 127)	

BEAT CHANGE

№	Параметр	Диапазон	Значение	№ таблицы
01	BeatChange	-63 – +63	(1 – 127)	
02	Beat Range	0 – 12	(0 – 12)	
03	PitchChange	-63 – +63	(1 – 127)	
04	Pitch Range	0 – 12	(0 – 12)	
05	Accuracy Type	sound4 – normal – rythm4	(0 – 8)	
06	EQ Frequency	32Hz – 2.0kHz	(4 – 40)	3
07	EQ Gain	-12dB – +12dB	(52 – 76)	
08	EQ Width	1.0 – 12.0	(10 – 120)	
10	Dry/Wet Balance	D63>W – D=W – D<W63	(1 – 127)	

RING MODULATOR

№	Параметр	Диапазон	Значение	№ таблицы
01	OSC Freq Coarse	0.5 – 5kHz	(0 – 127)	19
02	OSC Freq Fine	0 – 127	(0 – 127)	
03	LFO Wave	tri, sine	(0 – 1)	
04	LFO Depth	0 – 127	(0 – 127)	
05	LFO Speed	0.0Hz – 39.70Hz	(0 – 127)	1
06	HPF Cutoff Frequency	20Hz – 8.0kHz	(0 – 52)	3
07	LPF Cutoff Frequency	1.0kHz – 20.0kHz	(34 – 60)	3
10	Dry / Wet Balance	D63>W – D=W – D<W63	(1 – 127)	
13	EQ Low Frequency	32Hz – 2.0kHz	(4 – 40)	3
14	EQ Low Gain	-12dB – +12dB	(52 – 76)	
15	EQ High Frequency	500Hz – 16.0kHz	(28 – 58)	3
16	EQ High Gain	-12dB – +12dB	(52 – 76)	

DYNAMIC RING MODULATOR

№	Параметр	Диапазон	Значение	№ таблицы
01	Sensitivity	0 – 127	(0 – 127)	
02	HPF Cutoff Frequency	20Hz – 8.0kHz	(0 – 52)	3
03	LPF Cutoff Frequency	1.0kHz – 20.0kHz	(34 – 60)	3
04	Attack Time	0.3ms – 227ms	(0 – 127)	17
05	Release Time	2.6ms – 2171ms	(0 – 127)	18
06	Release Curve	0 – 127	(0 – 127)	
07	Direction	up, down	(0 – 1)	
08	Dyna Threshold Level	0 – 127	(0 – 127)	
09	Dyna Level Offset	0 – 127	(0 – 127)	
10	Dry / Wet Balance	D63>W – D=W – D<W63	(1 – 127)	
13	EQ Low Frequency	32Hz – 2.0kHz	(4 – 40)	3
14	EQ Low Gain	-12dB – +12dB	(52 – 76)	
15	EQ High Frequency	500Hz – 16.0kHz	(28 – 58)	3
16	EQ High Gain	-12dB – +12dB	(52 – 76)	

DYNAMIC FILTER

№	Параметр	Диапазон	Значение	№ таблицы
01	Filter Type	LPF (12dB), LPF (18dB), LPF (24dB), HPF, BPF, BEF	(0 – 5)	
02	Sensitivity	0 – 127	(0 – 127)	
03	Dyna Level Offset	0 – 127	(0 – 127)	
04	Resonance	-16 – +111	(0 – 127)	
05	Attack Time	0.3ms – 227ms	(0 – 127)	17
06	Release Time	2.6ms – 2171ms	(0 – 127)	18
07	Release Curve	0 – 127	(0 – 127)	
08	Direction	up, down	(0 – 1)	
09	Dyna Threshold Level	0 – 127	(0 – 127)	
10	Dry/Wet Balance	D63>W – D=W – D<W63	(1 – 127)	
13	EQ Low Frequency	32Hz – 2.0kHz	(4 – 40)	3
14	EQ Low Gain	-12dB – +12dB	(52 – 76)	
15	EQ High Frequency	500Hz – 16.0kHz	(28 – 58)	3
16	EQ High Gain	-12dB – +12dB	(52 – 76)	

Блок основных эффектов

Control Delay2 (stereo)
LO-FI
V-Distortion
Isolator
Dynamic Filter
Slice
Ring Modulator
Multi Band Comp 1

Блок главного эквалайзера

Master EQ

№	Параметр	Диапазон	Значение	№ таблицы
01	EQ Gain1	-12dB – +12dB	(52 – 76)	
02	EQ Frequency1	32Hz – 2.0kHz	(4 – 40)	3
03	EQ Q1	0.1 – 12.0	(1 – 120)	
04	EQ Shape1	shelving, peaking	(0 – 1)	
05	EQ Gain2	-12dB – +12dB	(52 – 76)	
06	EQ Frequency2	100Hz – 10kHz	(14 – 54)	3
07	EQ Q2	0.1 – 12.0	(1 – 120)	
09	EQ Gain3	-12dB – +12dB	(52 – 76)	
10	EQ Frequency3	100Hz – 10kHz	(14 – 54)	3
11	EQ Q3	0.1 – 12.0	(1 – 120)	
13	EQ Gain4	-12dB – +12dB	(52 – 76)	
14	EQ Frequency4	100Hz – 10kHz	(14 – 54)	3
15	EQ Q4	0.1 – 12.0	(1 – 120)	
17	EQ Gain5	-12dB – +12dB	(52 – 76)	
18	EQ Frequency5	500Hz – 16kHz	(28 – 58)	3
19	EQ Q5	0.1 – 12.0	(1 – 120)	
20	EQ Shape5	shelving, peaking	(0 – 1)	

При выборе для параметра EQ Shape 1 варианта Peaking диапазон частот EQ Frequency 1 составляет 63 Гц … 2,0 кГц (10 – 40).

Таблица назначения данных эффектам

Таблица 1

LFO Frequency

Данные	Значение	Данные	Значение
0	0.00	64	2.69
1	0.04	65	2.78
2	0.08	66	2.86
3	0.13	67	2.94
4	0.17	68	3.03
5	0.21	69	3.11
6	0.25	70	3.20
7	0.29	71	3.28
8	0.34	72	3.37
9	0.38	73	3.45
10	0.42	74	3.53
11	0.46	75	3.62
12	0.51	76	3.70
13	0.55	77	3.87
14	0.59	78	4.04
15	0.63	79	4.21
16	0.67	80	4.37
17	0.72	81	4.54
18	0.76	82	4.71
19	0.80	83	4.88
20	0.84	84	5.05
21	0.88	85	5.22
22	0.93	86	5.38
23	0.97	87	5.55
24	1.01	88	5.72
25	1.05	89	6.06
26	1.09	90	6.39
27	1.14	91	6.73
28	1.18	92	7.07
29	1.22	93	7.40
30	1.26	94	7.74
31	1.30	95	8.08
32	1.35	96	8.41
33	1.39	97	8.75
34	1.43	98	9.08
35	1.47	99	9.42
36	1.51	100	9.76
37	1.56	101	10.1
38	1.60	102	10.8
39	1.64	103	11.4
40	1.68	104	12.1
41	1.72	105	12.8
42	1.77	106	13.5
43	1.81	107	14.1
44	1.85	108	14.8
45	1.89	109	15.5
46	1.94	110	16.2
47	1.98	111	16.8
48	2.02	112	17.5
49	2.06	113	18.2
50	2.10	114	19.5
51	2.15	115	20.9
52	2.19	116	22.2
53	2.23	117	23.6
54	2.27	118	24.9
55	2.31	119	26.2
56	2.36	120	27.6
57	2.40	121	28.9
58	2.44	122	30.3
59	2.48	123	31.6
60	2.52	124	33.0
61	2.57	125	34.3
62	2.61	126	37.0
63	2.65	127	39.7

Таблица 2

Modulation Delay Offset

Данные	Значение	Данные	Значение
0	0.0	64	6.4
1	0.1	65	6.5
2	0.2	66	6.6
3	0.3	67	6.7
4	0.4	68	6.8
5	0.5	69	6.9
6	0.6	70	7.0
7	0.7	71	7.1
8	0.8	72	7.2
9	0.9	73	7.3
10	1.0	74	7.4
11	1.1	75	7.5
12	1.2	76	7.6
13	1.3	77	7.7
14	1.4	78	7.8
15	1.5	79	7.9
16	1.6	80	8.0
17	1.7	81	8.1
18	1.8	82	8.2
19	1.9	83	8.3
20	2.0	84	8.4
21	2.1	85	8.5
22	2.2	86	8.6
23	2.3	87	8.7
24	2.4	88	8.8
25	2.5	89	8.9
26	2.6	90	9.0
27	2.7	91	9.1
28	2.8	92	9.2
29	2.9	93	9.3
30	3.0	94	9.4
31	3.1	95	9.5
32	3.2	96	9.6
33	3.3	97	9.7
34	3.4	98	9.8
35	3.5	99	9.9
36	3.6	100	10.0
37	3.7	101	11.1
38	3.8	102	12.2
39	3.9	103	13.3
40	4.0	104	14.4
41	4.1	105	15.5
42	4.2	106	17.1
43	4.3	107	18.6
44	4.4	108	20.2
45	4.5	109	21.8
46	4.6	110	23.3
47	4.7	111	24.9
48	4.8	112	26.5
49	4.9	113	28.0
50	5.0	114	29.6
51	5.1	115	31.2
52	5.2	116	32.8
53	5.3	117	34.3
54	5.4	118	35.9
55	5.5	119	37.5
56	5.6	120	39.0
57	5.7	121	40.6
58	5.8	122	42.2
59	5.9	123	43.7
60	6.0	124	45.3
61	6.1	125	46.9
62	6.2	126	48.4
63	6.3	127	50.0

Таблица 3

EQ Frequency

Данные	Значение
0	THRU (20)
1	22
2	25
3	28
4	32
5	36
6	40
7	45
8	50
9	56
10	63
11	70
12	80
13	90
14	100
15	110
16	125
17	140
18	160
19	180
20	200
21	225
22	250
23	280
24	315
25	355
26	400
27	450
28	500
29	560
30	630
31	700
32	800
33	900
34	1.0k
35	1.1k
36	1.2k
37	1.4k
38	1.6k
39	1.8k
40	2.0k
41	2.2k
42	2.5k
43	2.8k
44	3.2k
45	3.6k
46	4.0k
47	4.5k
48	5.0k
49	5.6k
50	6.3k
51	7.0k
52	8.0k
53	9.0k
54	10.0k
55	11.0k
56	12.0k
57	14.0k
58	16.0k
59	18.0k
60	THRU (20.0k)

Таблица 4

Reverb Time

Данные	Значение
0	0.3
1	0.4
2	0.5
3	0.6
4	0.7
5	0.8
6	0.9
7	1.0
8	1.1
9	1.2
10	1.3
11	1.4
12	1.5
13	1.6
14	1.7
15	1.8
16	1.9
17	2.0
18	2.1
19	2.2
20	2.3
21	2.4
22	2.5
23	2.6
24	2.7
25	2.8
26	2.9
27	3.0
28	3.1
29	3.2
30	3.3
31	3.4
32	3.5
33	3.6
34	3.7
35	3.8
36	3.9
37	4.0
38	4.1
39	4.2
40	4.3
41	4.4
42	4.5
43	4.6
44	4.7
45	4.8
46	4.9
47	5.0
48	5.5
49	6.0
50	6.5
51	7.0
52	7.5
53	8.0
54	8.5
55	9.0
56	9.5
57	10.0
58	11.0
59	12.0
60	13.0
61	14.0
62	15.0
63	16.0
64	17.0
65	18.0
66	19.0
67	20.0
68	25.0
69	30.0

Таблица 5

Delay Time (0.1~200.0 [ms])

Данные	Значение	Данные	Значение
0	0.1	64	100.8
1	1.7	65	102.4
2	3.2	66	104.0
3	4.8	67	105.6
4	6.4	68	107.1
5	8.0	69	108.7
6	9.5	70	110.3
7	11.1	71	111.9
8	12.7	72	113.4
9	14.3	73	115.0
10	15.8	74	116.6
11	17.4	75	118.2
12	19.0	76	119.7
13	20.6	77	121.3
14	22.1	78	122.9
15	23.7	79	124.4
16	25.3	80	126.0
17	26.9	81	127.6
18	28.4	82	129.2
19	30.0	83	130.7
20	31.6	84	132.3
21	33.2	85	133.9
22	34.7	86	135.5
23	36.3	87	137.0
24	37.9	88	138.6
25	39.5	89	140.2
26	41.0	90	141.8
27	42.6	91	143.3
28	44.2	92	144.9
29	45.7	93	146.5
30	47.3	94	148.1
31	48.9	95	149.6
32	50.5	96	151.2
33	52.0	97	152.8
34	53.6	98	154.4
35	55.2	99	155.9
36	56.8	100	157.5
37	58.3	101	159.1
38	59.9	102	160.6
39	61.5	103	162.2
40	63.1	104	163.8
41	64.6	105	165.4
42	66.2	106	166.9
43	67.8	107	168.5
44	69.4	108	170.1
45	70.9	109	171.7
46	72.5	110	173.2
47	74.1	111	174.8
48	75.7	112	176.4
49	77.2	113	178.0
50	78.8	114	179.5
51	80.4	115	181.1
52	81.9	116	182.7
53	83.5	117	184.3
54	85.1	118	185.8
55	86.7	119	187.4
56	88.2	120	189.0
57	89.8	121	190.6
58	91.4	122	192.1
59	93.0	123	193.7
60	94.5	124	195.3
61	96.1	125	196.9
62	97.7	126	198.4
63	99.3	127	200.0

Таблица 6
Room Size

Данные	Значение	Данные	Значение
0	0.1	64	10.1
1	0.3	65	10.3
2	0.4	66	10.4
3	0.6	67	10.6
4	0.7	68	10.8
5	0.9	69	10.9
6	1.0	70	11.1
7	1.2	71	11.2
8	1.4	72	11.4
9	1.5	73	11.5
10	1.7	74	11.7
11	1.8	75	11.9
12	2.0	76	12.0
13	2.1	77	12.2
14	2.3	78	12.3
15	2.5	79	12.5
16	2.6	80	12.6
17	2.8	81	12.8
18	2.9	82	12.9
19	3.1	83	13.1
20	3.2	84	13.3
21	3.4	85	13.4
22	3.5	86	13.6
23	3.7	87	13.7
24	3.9	88	13.9
25	4.0	89	14.0
26	4.2	90	14.2
27	4.3	91	14.4
28	4.5	92	14.5
29	4.6	93	14.7
30	4.8	94	14.8
31	5.0	95	15.0
32	5.1	96	15.1
33	5.3	97	15.3
34	5.4	98	15.5
35	5.6	99	15.6
36	5.7	100	15.8
37	5.9	101	15.9
38	6.1	102	16.1
39	6.2	103	16.2
40	6.4	104	16.4
41	6.5	105	16.6
42	6.7	106	16.7
43	6.8	107	16.9
44	7.0	108	17.0
45	7.2	109	17.2
46	7.3	110	17.3
47	7.5	111	17.5
48	7.6	112	17.6
49	7.8	113	17.8
50	7.9	114	18.0
51	8.1	115	18.1
52	8.2	116	18.3
53	8.4	117	18.4
54	8.6	118	18.6
55	8.7	119	18.7
56	8.9	120	18.9
57	9.0	121	19.1
58	9.2	122	19.2
59	9.3	123	19.4
60	9.5	124	19.5
61	9.7	125	19.7
62	9.8	126	19.8
63	10.0	127	20.0

Таблица 7
Delay Time (0.1~400.0 [ms])

Данные	Значение	Данные	Значение
0	0.1	64	201.6
1	3.2	65	204.8
2	6.4	66	207.9
3	9.5	67	211.1
4	12.7	68	214.2
5	15.8	69	217.4
6	19.0	70	220.5
7	22.1	71	223.7
8	25.3	72	226.8
9	28.4	73	230.0
10	31.6	74	233.1
11	34.7	75	236.3
12	37.9	76	239.4
13	41.0	77	242.6
14	44.2	78	245.7
15	47.3	79	248.9
16	50.5	80	252.0
17	53.6	81	255.2
18	56.8	82	258.3
19	59.9	83	261.5
20	63.1	84	264.6
21	66.2	85	267.7
22	69.4	86	270.9
23	72.5	87	274.0
24	75.7	88	277.2
25	78.8	89	280.3
26	82.0	90	283.5
27	85.1	91	286.6
28	88.3	92	289.8
29	91.4	93	292.9
30	94.6	94	296.1
31	97.7	95	299.2
32	100.9	96	302.4
33	104.0	97	305.5
34	107.2	98	308.7
35	110.3	99	311.8
36	113.5	100	315.0
37	116.6	101	318.1
38	119.8	102	321.3
39	122.9	103	324.4
40	126.1	104	327.6
41	129.2	105	330.7
42	132.4	106	333.9
43	135.5	107	337.0
44	138.6	108	340.2
45	141.8	109	343.3
46	144.9	110	346.5
47	148.1	111	349.6
48	151.2	112	352.8
49	154.4	113	355.9
50	157.5	114	359.1
51	160.7	115	362.2
52	163.8	116	365.4
53	167.0	117	368.5
54	170.1	118	371.7
55	173.3	119	374.8
56	176.4	120	378.0
57	179.6	121	381.1
58	182.7	122	384.3
59	185.9	123	387.4
60	189.0	124	390.6
61	192.2	125	393.7
62	195.3	126	396.9
63	198.5	127	400.0

Таблица 8
Compressor Attack Time

Данные	Значение
0	1
1	2
2	3
3	4
4	5
5	6
6	7
7	8
8	9
9	10
10	12
11	14
12	16
13	18
14	20
15	23
16	26
17	30
18	35
19	40
20	50
21	60
22	70
23	80
24	100
25	120
26	140
27	160
28	180
29	200

Таблица 9
Compressor Release Time

Данные	Значение
0	10
1	15
2	25
3	35
4	45
5	55
6	65
7	75
8	85
9	100
10	115
11	140
12	170
13	230
14	340
15	680
16	850
17	1000
18	1200
19	1500
20	1700
21	2000
22	2400
23	3000

Таблица 10
Compressor Ratio

Данные	Значение
0	1.0
1	1.5
2	2.0
3	3.0
4	5.0
5	7.0
6	10.0
7	20.0

Таблица 11
Reverb Width, Depth, Height

Данные	Значение	Данные	Значение
0	0.5	53	14.5
1	0.8	54	14.8
2	1.0	55	15.1
3	1.3	56	15.4
4	1.5	57	15.6
5	1.8	58	15.9
6	2.0	59	16.2
7	2.3	60	16.5
8	2.6	61	16.8
9	2.8	62	17.1
10	3.1	63	17.3
11	3.3	64	17.6
12	3.6	65	17.9
13	3.9	66	18.2
14	4.1	67	18.5
15	4.4	68	18.8
16	4.6	69	19.1
17	4.9	70	19.4
18	5.2	71	19.7
19	5.4	72	20.0
20	5.7	73	20.2
21	5.9	74	20.5
22	6.2	75	20.8
23	6.5	76	21.1
24	6.7	77	21.4
25	7.0	78	21.7
26	7.2	79	22.0
27	7.5	80	22.4
28	7.8	81	22.7
29	8.0	82	23.0
30	8.3	83	23.3
31	8.6	84	23.6
32	8.8	85	23.9
33	9.1	86	24.2
34	9.4	87	24.5
35	9.6	88	24.9
36	9.9	89	25.2
37	10.2	90	25.5
38	10.4	91	25.8
39	10.7	92	26.1
40	11.0	93	26.5
41	11.2	94	26.8
42	11.5	95	27.1
43	11.8	96	27.5
44	12.1	97	27.8
45	12.3	98	28.1
46	12.6	99	28.5
47	12.9	100	28.8
48	13.1	101	29.2
49	13.4	102	29.5
50	13.7	103	29.9
51	14.0	104	30.2
52	14.2		

Таблица 12
Wah Release Time

Данные	Значение
52	10
53	15
54	25
55	35
56	45
57	55
58	65
59	75
60	85
61	100
62	115
63	140
64	170
65	230
66	340
67	680

Таблица 13
Lo-Fi Sampling Frequency Control

Данные	Значение	Данные	Значение
0	44.1k	64	678.5
1	22.1k	65	668.2
2	14.7k	66	658.2
3	11.0k	67	648.5
4	8.82k	68	639.1
5	7.35k	69	630.0
6	6.30k	70	621.1
7	5.51k	71	612.5
8	4.90k	72	604.1
9	4.41k	73	595.9
10	4.01k	74	588.0
11	3.68k	75	580.3
12	3.39k	76	572.7
13	3.15k	77	565.4
14	2.94k	78	558.2
15	2.76k	79	551.3
16	2.59k	80	544.4
17	2.45k	81	537.8
18	2.32k	82	531.3
19	2.21k	83	525.0
20	2.10k	84	518.8
21	2.00k	85	512.8
22	1.92k	86	506.9
23	1.84k	87	501.1
24	1.76k	88	495.5
25	1.70k	89	490.0
26	1.63k	90	484.6
27	1.58k	91	479.3
28	1.52k	92	474.2
29	1.47k	93	469.1
30	1.42k	94	464.2
31	1.38k	95	459.4
32	1.34k	96	454.6
33	1.30k	97	450.0
34	1.26k	98	445.5
35	1.23k	99	441.0
36	1.19k	100	436.6
37	1.16k	101	432.4
38	1.13k	102	428.2
39	1.10k	103	424.0
40	1.08k	104	420.0
41	1.05k	105	416.0
42	1.03k	106	412.1
43	1.00k	107	408.3
44	980.0	108	404.6
45	958.7	109	400.9
46	938.3	110	397.3
47	918.8	111	393.8
48	900.0	112	390.3
49	882.0	113	386.8
50	864.7	114	383.5
51	848.1	115	380.2
52	832.1	116	376.9
53	816.7	117	373.7
54	801.8	118	370.6
55	787.5	119	367.5
56	773.7	120	364.5
57	760.3	121	361.5
58	747.5	122	358.5
59	735.0	123	355.6
60	723.0	124	352.8
61	711.3	125	350.0
62	700.0	126	347.2
63	689.1	127	344.5

Таблица 14
Tempo

Данные	Значение
0	32nd/3
1	64th.
2	32nd
3	16th/3
4	32nd.
5	16th
6	8th/3
7	16th.
8	8th
9	4th/3
10	8th.
11	4th
12	2nd/3
13	4th.
14	2nd
15	Whole/3
16	2nd.
17	4thX4
18	4thX5
19	4thX6
20	4thX7
21	4thX8

Таблица 15
Multi Compressor Gain (dB)

Данные	Значение	Данные	Значение
0	-∞	31	-6
1	-60	32	-5
2	-57	33	-4
3	-54	34	-3
4	-51	35	-2
5	-48	36	-1
6	-45	37	0
7	-42	38	1
8	-39	39	2
9	-36	40	3
10	-33	41	4
11	-30	42	5
12	-27	43	6
13	-24	44	7
14	-23	45	8
15	-22	46	9
16	-21	47	10
17	-20	48	11
18	-19	49	12
19	-18	50	13
20	-17	51	14
21	-16	52	15
22	-15	53	16
23	-14	54	17
24	-13	55	18
25	-12		
26	-11		
27	-10		
28	-9		
29	-8		
30	-7		

Таблица 16
Divide Frequency (Hz)

Данные	Значение1	Значение2	Данные	Значение1	Значение2
0	32	1.2k	64	315	3.2k
1	32	1.6k	65	315	4.0k
2	32	2.0k	66	315	5.0k
3	32	2.5k	67	315	6.3k
4	32	3.2k	68	315	8.0k
5	32	4.0k	69	315	10.0k
6	32	5.0k	70	500	1.2k
7	32	6.3k	71	500	1.6k
8	32	8.0k	72	500	2.0k
9	32	10.0k	73	500	2.5k
10	63	1.2k	74	500	3.2k
11	63	1.6k	75	500	4.0k
12	63	2.0k	76	500	5.0k
13	63	2.5k	77	500	6.3k
14	63	3.2k	78	500	8.0k
15	63	4.0k	79	500	10.0k
16	63	5.0k	80	630	1.2k
17	63	6.3k	81	630	1.6k
18	63	8.0k	82	630	2.0k
19	63	10.0k	83	630	2.5k
20	80	1.2k	84	630	3.2k
21	80	1.6k	85	630	4.0k
22	80	2.0k	86	630	5.0k
23	80	2.5k	87	630	6.3k
24	80	3.2k	88	630	8.0k
25	80	4.0k	89	630	10.0k
26	80	5.0k			
27	80	6.3k			
28	80	8.0k			
29	80	10.0k			
30	125	1.2k			
31	125	1.6k			
32	125	2.0k			
33	125	2.5k			
34	125	3.2k			
35	125	4.0k			
36	125	5.0k			
37	125	6.3k			
38	125	8.0k			
39	125	10.0k			
40	160	1.2k			
41	160	1.6k			
42	160	2.0k			
43	160	2.5k			
44	160	3.2k			
45	160	4.0k			
46	160	5.0k			
47	160	6.3k			
48	160	8.0k			
49	160	10.0k			
50	250	1.2k			
51	250	1.6k			
52	250	2.0k			
53	250	2.5k			
54	250	3.2k			
55	250	4.0k			
56	250	5.0k			
57	250	6.3k			
58	250	8.0k			
59	250	10.0k			
60	315	1.2k			
61	315	1.6k			
62	315	2.0k			
63	315	2.5k			

Таблица 17
Dyna Attack Time (ms)

Данные	Значение	Данные	Значение
0	0.3	64	112
1	0.9	65	114
2	1.8	66	116
3	2.7	67	118
4	3.6	68	120
5	5.4	69	121
6	7.2	70	123
7	9.0	71	125
8	10.0	72	127
9	12.0	73	129
10	14.0	74	130
11	16.0	75	132
12	18.0	76	134
13	20.0	77	136
14	21.0	78	138
15	23.0	79	140
16	25.0	80	141
17	27.0	81	143
18	29.0	82	145
19	30.0	83	147
20	32.0	84	149
21	34.0	85	150
22	36.0	86	152
23	38.0	87	154
24	40.0	88	156
25	41.0	89	158
26	43.0	90	160
27	45.0	91	161
28	47.0	92	163
29	49.0	93	165
30	50.0	94	167
31	52.0	95	169
32	54.0	96	170
33	56.0	97	172
34	58.0	98	174
35	60.0	99	176
36	61.0	100	178
37	63.0	101	180
38	65.0	102	181
39	67.0	103	183
40	69.0	104	185
41	70.0	105	187
42	72.0	106	189
43	74.0	107	190
44	76.0	108	192
45	78.0	109	194
46	80.0	110	196
47	81.0	111	198
48	83.0	112	200
49	85.0	113	201
50	87.0	114	203
51	89.0	115	205
52	90.0	116	207
53	92.0	117	209
54	94.0	118	210
55	96.0	119	212
56	98.0	120	214
57	100.0	121	216
58	101.0	122	218
59	103.0	123	220
60	105.0	124	221
61	107.0	125	223
62	109.0	126	225
63	110.0	127	227

Таблица 18
Dyna Release Time (ms)

Данные	Значение	Данные	Значение
0	2.6	64	369
1	3.0	65	391
2	3.4	66	413
3	3.9	67	434
4	4.3	68	456
5	4.7	69	478
6	5.2	70	499
7	5.6	71	521
8	6.0	72	543
9	6.5	73	565
10	6.9	74	586
11	7.3	75	608
12	7.8	76	630
13	8.2	77	651
14	8.6	78	673
15	13	79	695
16	17	80	717
17	22	81	738
18	26	82	760
19	30	83	782
20	35	84	803
21	39	85	825
22	43	86	847
23	48	87	869
24	52	88	890
25	56	89	912
26	61	90	934
27	65	91	955
28	69	92	977
29	74	93	999
30	78	94	1021
31	83	95	1042
32	87	96	1064
33	91	97	1086
34	96	98	1107
35	100	99	1129
36	104	100	1151
37	109	101	1173
38	113	102	1194
39	117	103	1216
40	122	104	1238
41	126	105	1259
42	130	106	1281
43	135	107	1303
44	139	108	1346
45	143	109	1390
46	148	110	1433
47	152	111	1477
48	156	112	1520
49	161	113	1563
50	165	114	1607
51	169	115	1650
52	174	116	1694
53	178	117	1737
54	182	118	1781
55	187	119	1824
56	195	120	1867
57	217	121	1911
58	239	122	1954
59	261	123	1998
60	282	124	2041
61	304	125	2085
62	326	126	2128
63	347	127	2171

Таблица 19
Ring Mod OSC Freq Coarse (Hz)

Данные	Значение	Данные	Значение
0	0.5	64	151
1	1.5	65	160
2	2.0	66	169
3	2.5	67	179
4	3.5	68	189
5	4.0	69	200
6	4.5	70	211
7	5.5	71	223
8	6.0	72	236
9	6.5	73	249
10	7.5	74	264
11	8.0	75	279
12	8.4	76	295
13	8.9	77	311
14	9.4	78	329
15	9.9	79	348
16	10.5	80	368
17	11.1	81	389
18	11.7	82	411
19	12.4	83	435
20	13.1	84	459
21	13.9	85	486
22	14.7	86	513
23	15.5	87	543
24	16.4	88	574
25	17.3	89	607
26	18.3	90	641
27	19.4	91	678
28	20.5	92	717
29	21.7	93	757
30	22.9	94	801
31	24.2	95	846
32	25.6	96	895
33	27.1	97	946
34	28.6	98	1.00k
35	30.3	99	1.05k
36	32.0	100	1.11k
37	33.8	101	1.18k
38	35.8	102	1.24k
39	37.8	103	1.32k
40	40.0	104	1.39k
41	42.2	105	1.47k
42	44.7	106	1.55k
43	47.2	107	1.64k
44	49.9	108	1.74k
45	52.7	109	1.84k
46	55.8	110	1.94k
47	58.9	111	2.05k
48	62.3	112	2.17k
49	65.9	113	2.29k
50	69.6	114	2.43k
51	73.6	115	2.56k
52	77.8	116	2.71k
53	82.3	117	2.87k
54	87.0	118	3.03k
55	91.9	119	3.20k
56	97.2	120	3.39k
57	102	121	3.58k
58	108	122	3.79k
59	114	123	4.00k
60	121	124	4.23k
61	128	125	4.47k
62	135	126	4.73k
63	143	127	5.00k

Таблица 20
V-Flanger Delay Offset

Данные	Значение	Данные	Значение
0	0.09	70	6.35
1	0.11	71	6.67
2	0.13	72	7.01
3	0.15	73	7.37
4	0.18	74	7.74
5	0.20	75	8.13
6	0.22	76	8.54
7	0.24	77	8.97
8	0.27	78	9.41
9	0.29	79	9.85
10	0.31	80	10.29
11	0.34	81	10.73
12	0.36	82	11.17
13	0.38	83	11.61
14	0.40	84	12.05
15	0.42	85	12.49
16	0.43	86	12.93
17	0.46	87	13.37
18	0.48	88	13.81
19	0.51	89	14.24
20	0.53	90	14.68
21	0.56	91	15.12
22	0.59	92	15.56
23	0.62	93	16.00
24	0.65	94	16.44
25	0.68	95	16.88
26	0.72	96	17.32
27	0.76	97	17.76
28	0.79	98	18.20
29	0.83	99	18.64
30	0.88	100	19.08
31	0.92	101	19.52
32	0.97	102	19.96
33	1.02	103	20.40
34	1.07	104	20.83
35	1.12	105	21.27
36	1.18	106	21.71
37	1.24	107	22.15
38	1.30	108	22.59
39	1.37	109	23.03
40	1.44	110	23.47
41	1.51	111	23.91
42	1.59	112	24.35
43	1.67	113	24.79
44	1.76	114	25.23
45	1.84	115	25.66
46	1.94	116	26.10
47	2.04	117	26.54
48	2.14	118	26.98
49	2.25	119	27.42
50	2.36	120	27.86
51	2.48	121	28.30
52	2.61	122	28.74
53	2.74	123	29.18
54	2.88	124	29.62
55	3.03	125	30.06
56	3.18	126	30.50
57	3.34	127	30.94
58	3.51	128	31.38
59	3.69	129	31.82
60	3.87	130	32.25
61	4.07	131	32.69
62	4.28	132	33.13
63	4.49	133	33.57
64	4.72	134	34.01
65	4.96	135	34.45
66	5.21	136	34.89
67	5.47	137	35.33
68	5.75	138	35.77
69	6.04	139	36.21

Таблица 21
Modulation Phase

Данные	Значение
0	-180
1	-158
2	-135
3	-113
4	-90
5	-68
6	-45
7	-23
8	0
9	23
10	45
11	68
12	90
13	113
14	135
15	158
16	180

Таблица 22
Vintage Flanger Speed

Данные	Значение	Данные	Значение	Данные	Значение	Данные	Значение
0	0.040	64	0.247	128	0.988	192	3.953
1	0.042	65	0.252	129	1.009	193	4.037
2	0.045	66	0.258	130	1.030	194	4.122
3	0.047	67	0.263	131	1.051	195	4.206
4	0.050	68	0.268	132	1.072	196	4.290
5	0.053	69	0.273	133	1.093	197	4.374
6	0.055	70	0.281	134	1.125	198	4.500
7	0.058	71	0.287	135	1.146	199	4.584
8	0.060	72	0.292	136	1.167	200	4.668
9	0.063	73	0.300	137	1.199	201	4.752
10	0.066	74	0.308	138	1.220	202	4.879
11	0.068	75	0.313	139	1.251	203	5.005
12	0.071	76	0.321	140	1.272	204	5.131
13	0.074	77	0.326	141	1.304	205	5.215
14	0.076	78	0.334	142	1.335	206	5.341
15	0.079	79	0.342	143	1.367	207	5.467
16	0.081	80	0.347	144	1.409	208	5.552
17	0.084	81	0.357	145	1.430	209	5.720
18	0.087	82	0.363	146	1.451	210	5.804
19	0.089	83	0.373	147	1.493	211	5.972
20	0.092	84	0.379	148	1.514	212	6.056
21	0.095	85	0.389	149	1.556	213	6.224
22	0.097	86	0.400	150	1.577	214	6.309
23	0.100	87	0.405	151	1.619	215	6.477
24	0.102	88	0.415	152	1.661	216	6.645
25	0.105	89	0.426	153	1.682	217	6.813
26	0.108	90	0.431	154	1.724	218	6.897
27	0.110	91	0.442	155	1.766	219	7.066
28	0.113	92	0.452	156	1.808	220	7.234
29	0.116	93	0.463	157	1.851	221	7.402
30	0.118	94	0.473	158	1.893	222	7.570
31	0.121	95	0.484	159	1.935	223	7.738
32	0.124	96	0.494	160	1.977	224	7.907
33	0.126	97	0.505	161	2.019	225	8.075
34	0.129	98	0.515	162	2.061	226	8.243
35	0.131	99	0.526	163	2.103	227	8.411
36	0.134	100	0.536	164	2.145	228	8.580
37	0.137	101	0.547	165	2.187	229	8.748
38	0.139	102	0.563	166	2.250	230	9.000
39	0.145	103	0.573	167	2.292	231	9.168
40	0.147	104	0.589	168	2.334	232	9.337
41	0.150	105	0.599	169	2.397	233	9.589
42	0.152	106	0.615	170	2.460	234	9.757
43	0.158	107	0.626	171	2.502	235	10.00
44	0.160	108	0.636	172	2.565		
45	0.163	109	0.652	173	2.608		
46	0.168	110	0.668	174	2.671		
47	0.171	111	0.683	175	2.733		
48	0.173	112	0.704	176	2.776		
49	0.179	113	0.715	177	2.860		
50	0.181	114	0.725	178	2.902		
51	0.187	115	0.747	179	2.986		
52	0.189	116	0.757	180	3.028		
53	0.195	117	0.778	181	3.112		
54	0.197	118	0.789	182	3.154		
55	0.202	119	0.810	183	3.238		
56	0.208	120	0.831	184	3.323		
57	0.210	121	0.852	185	3.365		
58	0.216	122	0.862	186	3.449		
59	0.221	123	0.883	187	3.533		
60	0.226	124	0.904	188	3.617		
61	0.231	125	0.925	189	3.701		
62	0.237	126	0.946	190	3.785		
63	0.242	127	0.967	191	3.869		

Таблица 23
Vintage Phaser Speed

Данные	Значение	Данные	Значение	Данные	Значение	Данные	Значение
0	0.100	64	0.334	128	1.062	192	3.365
1	0.103	65	0.342	129	1.083	193	3.449
2	0.105	66	0.347	130	1.104	194	3.491
3	0.108	67	0.357	131	1.125	195	3.575
4	0.110	68	0.363	132	1.146	196	3.659
5	0.113	69	0.368	133	1.167	197	3.701
6	0.116	70	0.373	134	1.188	198	3.785
7	0.118	71	0.379	135	1.209	199	3.827
8	0.121	72	0.389	136	1.230	200	3.911
9	0.124	73	0.394	137	1.251	201	3.995
10	0.126	74	0.400	138	1.272	202	4.080
11	0.129	75	0.410	139	1.304	203	4.122
12	0.131	76	0.415	140	1.325	204	4.206
13	0.134	77	0.426	141	1.346	205	4.290
14	0.137	78	0.431	142	1.367	206	4.374
15	0.139	79	0.442	143	1.410	207	4.458
16	0.142	80	0.447	144	1.430	208	4.500
17	0.145	81	0.457	145	1.451	209	4.584
18	0.147	82	0.463	146	1.472	210	4.668
19	0.150	83	0.473	147	1.493	211	4.752
20	0.152	84	0.478	148	1.535	212	4.837
21	0.155	85	0.489	149	1.556	213	4.921
22	0.158	86	0.499	150	1.577	214	5.047
23	0.160	87	0.510	151	1.619	215	5.131
24	0.163	88	0.515	152	1.640	216	5.215
25	0.166	89	0.526	153	1.682	217	5.299
26	0.168	90	0.536	154	1.703	218	5.383
27	0.171	91	0.547	155	1.724	219	5.551
28	0.173	92	0.557	156	1.767	220	5.636
29	0.179	93	0.568	157	1.808	221	5.720
30	0.181	94	0.578	158	1.829	222	5.804
31	0.184	95	0.589	159	1.872	223	5.888
32	0.187	96	0.599	160	1.893	224	6.056
33	0.192	97	0.610	161	1.935	225	6.140
34	0.195	98	0.620	162	1.977	226	6.224
35	0.200	99	0.631	163	2.000	227	6.393
36	0.202	100	0.641	164	2.040	228	6.477
37	0.205	101	0.652	165	2.082	229	6.561
38	0.210	102	0.668	166	2.124	230	6.729
39	0.213	103	0.683	167	2.145	231	6.813
40	0.218	104	0.694	168	2.187	232	6.981
41	0.221	105	0.704	169	2.229	233	7.066
42	0.226	106	0.715	170	2.271	234	7.234
43	0.229	107	0.725	171	2.313	235	7.318
44	0.234	108	0.747	172	2.355	236	7.486
45	0.237	109	0.758	173	2.397	237	7.654
46	0.242	110	0.768	174	2.439	238	7.774
47	0.247	111	0.789	175	2.503	239	7.907
48	0.250	112	0.799	176	2.544	240	8.075
49	0.255	113	0.810	177	2.587	241	8.159
50	0.260	114	0.831	178	2.629	242	8.327
51	0.265	115	0.841	179	2.671	243	8.496
52	0.271	116	0.862	180	2.734	244	8.664
53	0.276	117	0.873	181	2.776	245	8.832
54	0.281	118	0.894	182	2.860	246	9.000
55	0.287	119	0.904	183	2.902	247	9.168
56	0.289	120	0.925	184	2.944	248	9.337
57	0.294	121	0.936	185	2.986	249	9.505
58	0.300	122	0.957	186	3.028	250	9.673
59	0.308	123	0.967	187	3.070	251	9.841
60	0.310	124	0.988	188	3.154	252	10.00
61	0.318	125	1.000	189	3.196		
62	0.323	126	1.030	190	3.280		
63	0.329	127	1.051	191	3.323		

Таблица 24
Vintage Wah Speed

Данные	Значение	Данные	Значение	Данные	Значение	Данные	Значение
0	0.100	64	0.384	128	1.451	192	5.552
1	0.103	65	0.394	129	1.493	193	5.636
2	0.105	66	0.405	130	1.514	194	5.720
3	0.108	67	0.410	131	1.556	195	5.888
4	0.110	68	0.421	132	1.598	196	5.972
5	0.113	69	0.426	133	1.619	197	6.140
6	0.116	70	0.436	134	1.661	198	6.224
7	0.118	71	0.447	135	1.703	199	6.393
8	0.129	72	0.457	136	1.724	200	6.477
9	0.124	73	0.463	137	1.766	201	6.665
10	0.126	74	0.473	138	1.808	202	6.813
11	0.129	75	0.484	139	1.851	203	6.897
12	0.131	76	0.494	140	1.872	204	7.066
13	0.134	77	0.505	141	1.914	205	7.234
14	0.137	78	0.515	142	1.956	206	7.402
15	0.139	79	0.526	143	1.999	207	7.570
16	0.142	80	0.536	144	2.040	208	7.654
17	0.145	81	0.547	145	2.082	209	7.823
18	0.147	82	0.563	146	2.124	210	7.991
19	0.152	83	0.573	147	2.166	211	8.159
20	0.155	84	0.584	148	2.229	212	8.327
21	0.157	85	0.599	149	2.250	213	8.496
22	0.163	86	0.610	150	2.313	214	8.748
23	0.166	87	0.620	151	2.355	215	8.916
24	0.168	88	0.636	152	2.397	216	9.084
25	0.173	89	0.652	153	2.460	217	9.253
26	0.176	90	0.662	154	2.502	218	9.505
27	0.179	91	0.673	155	2.566	219	9.673
28	0.184	92	0.694	156	2.608	220	9.841
29	0.187	93	0.704	157	2.671	221	10.09
30	0.189	94	0.725	158	2.734	222	10.26
31	0.195	95	0.736	159	2.776	223	10.51
32	0.200	96	0.747	160	2.818	224	10.77
33	0.202	97	0.768	161	2.902	225	10.93
34	0.208	98	0.778	162	2.944	226	11.10
35	0.210	99	0.799	163	3.028	227	11.44
36	0.216	100	0.820	164	3.070	228	11.61
37	0.221	101	0.831	165	3.154	229	11.94
38	0.226	102	0.852	166	3.196	230	12.11
39	0.231	103	0.873	167	3.280	231	12.45
40	0.234	104	0.883	168	3.336	232	12.62
41	0.239	105	0.904	169	3.407	233	12.95
42	0.244	106	0.935	170	3.491	234	13.29
43	0.250	107	0.946	171	3.575	235	13.46
44	0.255	108	0.967	172	3.659	236	13.79
45	0.260	109	0.988	173	3.701	237	13.96
46	0.265	110	0.999	174	3.785	238	14.30
47	0.271	111	1.020	175	3.869	239	14.64
48	0.276	112	1.051	176	3.953	240	14.97
49	0.284	113	1.072	177	4.037	241	15.31
50	0.289	114	1.093	178	4.122	242	15.65
51	0.294	115	1.115	179	4.206	243	15.98
52	0.302	116	1.136	180	4.290	244	16.32
53	0.308	117	1.157	181	4.374	245	16.65
54	0.315	118	1.188	182	4.500	246	16.99
55	0.321	119	1.209	183	4.584	247	17.33
56	0.326	120	1.241	184	4.668	248	17.66
57	0.334	121	1.262	185	4.795	249	18.00
58	0.342	122	1.293	186	4.879	250	18.34
59	0.347	123	1.314	187	4.963	251	18.84
60	0.357	124	1.346	188	5.090	252	19.18
61	0.363	125	1.367	189	5.173	253	19.51
62	0.368	126	1.409	190	5.299	254	20.00
63	0.379	127	1.430	191	5.383		

Таблица 25
Rev Hall Time

Данные	Значение
0	0.3
1	0.4
2	0.5
3	0.6
4	0.7
5	0.8
6	0.9
7	1.0
8	1.1
9	1.2
10	1.3
11	1.4
12	1.5
13	1.6
14	1.7
15	1.8
16	1.9
17	2.0
18	2.1
19	2.2
20	2.3
21	2.4
22	2.5
23	2.6
24	2.7
25	2.8
26	2.9
27	3.0
28	3.1
29	3.2
30	3.3
31	3.4
32	3.5
33	3.6
34	3.7
35	3.8
36	3.9
37	4.0
38	4.1
39	4.2
40	4.3
41	4.4
42	4.5
43	4.6
44	4.7
45	4.8
46	4.9
47	5.0
48	5.5
49	6.0
50	6.5
51	7.0
52	7.5
53	8.0
54	8.5
55	9.0
56	9.5
57	10.0
58	10.5
59	11.0
60	11.5
61	12.0
62	12.5
63	13.0
64	13.5
65	14.0
66	15.0
67	16.0
68	17.0
69	18.0

Таблица 25
Rev Room Time

Данные	Значение
0	0.3
1	0.4
2	0.5
3	0.6
4	0.7
5	0.8
6	0.9
7	1.0
8	1.1
9	1.2
10	1.3
11	1.4
12	1.5
13	1.6
14	1.7
15	1.8
16	1.9
17	2.0
18	2.1
19	2.2
20	2.3
21	2.4
22	2.5
23	2.6
24	2.7
25	2.8
26	2.9
27	3.0
28	3.1
29	3.2
30	3.3
31	3.4
32	3.5
33	3.6
34	3.7
35	3.8
36	3.9
37	4.0
38	4.1
39	4.2
40	4.3
41	4.4
42	4.5
43	4.6
44	4.7
45	4.8
46	4.9
47	5.0
48	5.1
49	5.2
50	5.3
51	5.4
52	5.5
53	5.6
54	5.7
55	5.8
56	5.9
57	6.0
58	6.1
59	6.2
60	6.3
61	6.4
62	6.5
63	6.6
64	6.7
65	6.8
66	6.9
67	7.0
68	8.0
69	10.0

Таблица 25
Rev Plate Time

Данные	Значение
0	0.3
1	0.4
2	0.5
3	0.6
4	0.7
5	0.8
6	0.9
7	1.0
8	1.1
9	1.2
10	1.3
11	1.4
12	1.5
13	1.6
14	1.7
15	1.8
16	1.9
17	2.0
18	2.1
19	2.2
20	2.3
21	2.4
22	2.5
23	2.6
24	2.7
25	2.8
26	2.9
27	3.0
28	3.1
29	3.2
30	3.3
31	3.4
32	3.5
33	3.6
34	3.7
35	3.8
36	3.9
37	4.0
38	4.1
39	4.2
40	4.3
41	4.4
42	4.5
43	4.6
44	4.7
45	4.8
46	4.9
47	5.0
48	5.5
49	6.0
50	6.5
51	7.0
52	7.5
53	8.0
54	8.5
55	9.0
56	9.5
57	10.0
58	10.5
59	11.0
60	11.5
61	12.0
62	12.5
63	13.0
64	14.0
65	15.0
66	17.0
67	20.0
68	23.0
69	26.0

Перечень параметров управления

Назначение присвоений A/B

№	Отображение	Описание
0	off	off
1	EQLow-G	MEQ Low Gain
2	EQLow-F	MEQ Low Frequency
3	EQLow-Q	MEQ Low Q
4	EQLoM-G	MEQ Low Mid Gain
5	EQLoM-F	MEQ Low Mid Frequency
6	EQLoM-Q	MEQ Low Mid Q
7	EQMid-G	MEQ Mid Gain
8	EQMid-F	MEQ Mid Frequency
9	EQMid-Q	MEQ Mid Q
10	EQHiM-G	MEQ High Mid Gain
11	EQHiM-F	MEQ High Mid Frequency
12	EQHiM-Q	MEQ High Mid Q
13	EQHighG	MEQ High Gain
14	EQHighF	MEQ High Frequency
15	EQHighQ	MEQ High Q
16 : 31	MEF-P1 : MEF-P16	MEFF Parameter 1 : MEFF Parameter 16
32 : 47	REV-P1 : REV-P16	Reverb Parameter 1 : Reverb Parameter 16
48	REV-Rtn	Reverb Return
49	REV-Pan	Reverb Pan
50 : 65	CHO-P1 : CHO-P16	Chorus Parameter 1 : Chorus Parameter 16
66	CHO-Rtn	Chorus Return
67	CHO-Pan	Chorus Pan
68	CHO->REV	Send Chorus To Reverb
69	ARP-Unt	Arpeggio Unit Multiply
70	ARP-Vel	Arpeggio Velocity Rate
71	ARP-Gat	Arpeggio Gate Time Rate
72	ARP-QuV	Arpeggio Quantize Value
73	ARP-QuS	Arpeggio Quantize Strength
74	ARP-Swg	Arpeggio Swing
75	Tempo	Arpeggio/Sequencer Tempo
76	AEG-Atk	AEG Attack Time
77	AEG-Dcy	AEG Decay Time
78	AEG-Sus	AEG Sustain Level
79	AEG-Rel	AEG Release Time
80	FEG-Atk	FEG Attack Time
81	FEG-Dcy	FEG Decay Time
82	FEG-Rel	FEG Release Time
83	FEG-Dpt	FEG Depth
84	Cutoff	Cutoff Frequency
85	Reso	Resonance

Назначение параметров управления голосами

№	Отображение	Описание	Обычный	Прочие
0	-------	off	O	O
1	Volume	Voice Volume	O	O
2	RevSend	Reverb Send	O	O
3	ChoSend	Chorus Send	O	O
4 : 19	INSA P1 : INSA P16	Insertion Effect A Parameter 1 : Insertion Effect A Parameter 16	O : O	O : O
20 : 35	INSB P1 : INSB P16	Insertion Effect B Parameter 1 : Insertion Effect B Parameter 16	O : O	O : O
36	CLFOSpd	Common LFO Speed	O	–
37	CLFO-D1	Common LFO Depth1	O	–
38	CLFO-D2	Common LFO Depth2	O	–
39	CLFO-D3	Common LFO Depth3	O	–
40	PorTime	Portamento Time	O	–
41	ELM-Lvl	Element Level	O	–
42	ELM-Pan	Element Pan	O	–
43	ELM-Dly	Element Key On Delay	O	–
44	ELFOSpd	Element LFO Speed	O	–
45	ELFO-PM	Element LFO Pitch Modulation Depth	O	–
46	ELFO-AM	Element LFO Amplitude Modulation Depth	O	–
47	ELFO-FM	Element LFO Filter Modulation Depth	O	–
48	PCH-Crs	Element Pitch Coarse	O	–
49	PCH-Fin	Element Pitch Fine	O	–
50	PEG-Dpt	Element Pitch EG Depth	O	–
51	PEG-Hld	Element Pitch EG Hold Time	O	–
52	PEG-Atk	Element Pitch EG Attack Time	O	–
53	PEG-D1	Element Pitch EG Decay1 Time	O	–
54	PEG-D2	Element Pitch EG Decay2 Time	O	–
55	PEG-Rel	Element Pitch EG Release Time	O	–
56	AEG-Atk	Element Amplitude EG Attack Time	O	–
57	AEG-D1	Element Amplitude EG Decay1 Time	O	–
58	AEG-D2	Element Amplitude EG Decay2 Time	O	–
59	AEG-Rel	Element Amplitude EG Release Time	O	–
60	FEG-Dpt	Element Filter EG Depth	O	–
61	FEG-Hld	Element Filter EG Hold Time	O	–
62	FEG-Atk	Element Filter EG Attack Time	O	–
63	FEG-D1	Element Filter EG Decay1 Time	O	–
64	FEG-D2	Element Filter EG Decay2 Time	O	–
65	FEG-Rel	Element Filter EG Release Time	O	–
66	FLT-Frq	Element Filter Cutoff Frequency	O	–
67	FLT-Rez	Element Filter Resonance	O	–
68	HPF-Frq	Element HPF Cutoff Frequency	O	–

O: available

Перечень стилей Multi

№	Наименование	№	Наименование
1	R&B Smooth	17	Guitar Pop
2	Hip Hop 1	18	Ballad
3	House	19	Combo Jazz
4	HardTrance	20	Samba
5	New R&B	21	Salsa
6	Flip Hop	22	Reggae
7	Hip Hop 2	23	Trance
8	Hip Hop 3	24	IbizaTranc
9	Disco	25	DreamDance
10	Funk 1	26	Chill Out
11	Funk 2	27	Club House
12	70's Rock	28	Garage
13	Soft Rock	29	Retro Pop
14	Unplugged	30	Xover Rock
15	Cool Funk	31	SpanishPop
16	Analog Pop	32	TurkishPop

Перечень типов арпеджио

В колонке «Тип голоса» указан общий тип голоса, который наилучшим образом соответствует выбранному типу арпеджио. Наименования голосов, указанные здесь в кавычках, являются специфическими голосами MO6 / MO8.

Категория	№ Арпеджио	Наименование арпеджио	Размер	Длина	Исходный темп	Тип голоса
Seq	001	UpOct1	4 / 4	1	120	Syn Comp/Lead
Seq	002	UpOct2	4 / 4	1	120	:
Seq	003	UpOct4	4 / 4	1	120	:
Seq	004	DownOct1	4 / 4	1	120	:
Seq	005	DownOct2	4 / 4	1	120	:
Seq	006	DownOct4	4 / 4	1	120	:
Seq	007	U/DAOct1	4 / 4	1	120	:
Seq	008	U/DAOct2	4 / 4	1	120	:
Seq	009	U/DAOct4	4 / 4	1	120	:
Seq	010	U/DBOct1	4 / 4	1	120	:
Seq	011	U/DBOct2	4 / 4	1	120	:
Seq	012	U/DBOct4	4 / 4	1	120	:
Seq	013	RndmOct1	4 / 4	1	120	:
Seq	014	RndmOct2	4 / 4	1	120	:
Seq	015	RndmOct4	4 / 4	1	120	:
Seq	016	Oct2Up	4 / 4	1	120	:
Seq	017	Oct4Up	4 / 4	1	120	:
Seq	018	UnisonUp	4 / 4	1	120	:
Seq	019	Up&Down1	4 / 4	1	120	:
Seq	020	Up&Down2	4 / 4	1	120	:
Seq	021	Up&Down4	4 / 4	1	120	:
Seq	022	Up&Alt1	4 / 4	1	120	:
Seq	023	Up&Rndm1	4 / 4	1	120	:
Seq	024	Up&Rndm2	4 / 4	1	120	:
Seq	025	Up&Rndm4	4 / 4	1	120	:
Seq	026	SynArp1	4 / 4	1	130	:
Seq	027	SynArp2	4 / 4	2	130	:
Seq	028	SynArp3	4 / 4	1	130	:
Seq	029	SynArp4	4 / 4	1	130	:
Seq	030	SynArp5	4 / 4	1	130	:
Seq	031	SynArp6	4 / 4	1	124	:
Seq	032	SynArp7	4 / 4	1	120	:
Seq	033	SynArp8	4 / 4	1	130	:
Seq	034	SynArp9	4 / 4	1	130	:
Seq	035	SynArp10	4 / 4	1	130	:
Seq	036	SynArp11	4 / 4	2	130	:
Seq	037	SynArp12	4 / 4	1	90	:
Seq	038	SynArp13	4 / 4	2	124	:
Seq	039	SynArp14	4 / 4	1	130	:
Seq	040	SynArp15	4 / 4	1	130	:
Seq	041	SynArp16	4 / 4	1	130	:
Seq	042	SynArp17	4 / 4	1	90	:
Seq	043	SynArp18	4 / 4	1	130	:
Seq	044	SynArp19	4 / 4	1	120	:
Seq	045	SynArp20	4 / 4	1	120	:
Seq	046	SynArp21	4 / 4	1	124	:
Seq	047	SynArp22	4 / 4	1	120	:
Seq	048	SynArp23	4 / 4	1	138	:
Seq	049	SynArp24	4 / 4	1	138	:
Seq	050	SynArp25	4 / 4	1	120	:
Seq	051	SynArp26	4 / 4	1	120	:
Seq	052	SynArp27	4 / 4	1	120	:
Seq	053	SynArp28	1 / 4	10	125	:
Seq	054	SynArp29	4 / 4	5	120	:
Seq	055	Techno1	4 / 4	2	120	:
Seq	056	Techno2	4 / 4	2	120	:
Seq	057	Techno3	4 / 4	2	120	:
Seq	058	Syncopa1	4 / 4	2	120	:
Seq	059	SyncpEco	4 / 4	2	120	:
Seq	060	PulsLine	4 / 4	2	120	:
Seq	061	SeqS&H1	4 / 4	4	120	:
Seq	062	SeqS&H2	4 / 4	4	120	:
Seq	063	Ocean	4 / 4	1	120	:
Seq	064	Orbit	4 / 4	1	140	:
Seq	065	X-Sweep1	4 / 4	1	140	:
Seq	066	X-Sweep2	4 / 4	1	140	:
Seq	067	X-Sweep3	4 / 4	1	140	:
Seq	068	Lamb	4 / 4	1	125	:
Seq	069	Harmo	4 / 4	1	150	:
Seq	070	Ascorbic	4 / 4	1	150	:
Seq	071	Doves	4 / 4	1	150	:
Seq	072	Chodal	4 / 4	2	150	:
Seq	073	Simple	4 / 4	2	150	:
Seq	074	Waggle	4 / 4	1	140	:

Категория	№ Арпеджио	Наименование арпеджио	Размер	Длина	Исходный темп	Тип голоса
Seq	075	SuperArp	4 / 4	2	120	Syn Comp/Lead
Seq	076	SpaceArp	4 / 4	2	120	:
Seq	077	StepLine	4 / 4	1	120	:
Seq	078	AcidLine	4 / 4	1	120	:
Seq	079	SplitArp	4 / 4	1	120	:
Seq	080	Step Seq	4 / 4	1	120	:
Seq	081	TekEcho1	4 / 4	2	120	:
Seq	082	Hardcore	4 / 4	3	150	:
Seq	083	MuteArp1	4 / 4	1	120	:
Seq	084	MuteArp2	4 / 4	1	120	:
Seq	085	VelGruv1	4 / 4	1	134	:
Seq	086	VelGruv2	4 / 4	1	134	:
Seq	087	MuteLine	4 / 4	1	134	:
Seq	088	PolyArp1	4 / 4	1	120	:
Seq	089	PolyArp2	4 / 4	1	120	:
Seq	090	Ana Seq	4 / 4	1	120	:
Seq	091	Planet	4 / 4	1	120	:
Seq	092	Thips	4 / 4	1	100	:
Seq	093	Boiler1	4 / 4	1	120	:
Seq	094	Boiler2	4 / 4	1	120	:
Seq	095	Boiler3	4 / 4	1	120	:
Seq	096	Boiler4	4 / 4	1	110	:
Seq	097	Bees1	4 / 4	1	118	:
Seq	098	Bees2	4 / 4	1	118	:
Seq	099	Bees3	4 / 4	1	118	:
Seq	100	NewR&B2D	4 / 4	2	90	:
Seq	101	NewR&B2E	4 / 4	2	90	:
Seq	102	NewR&B2F	4 / 4	2	90	:
Seq	103	HipHop3D	4 / 4	2	104	:
Seq	104	HipHop3E	4 / 4	2	104	:
Seq	105	HipHop3H	4 / 4	1	104	:
Seq	106	TranceC1	4 / 4	1	140	:
Seq	107	TranceB2	4 / 4	4	140	:
Seq	108	TranceE2	4 / 4	4	140	:
Seq	109	TranceA3	4 / 4	1	140	:
Seq	110	TranceF3	4 / 4	1	140	:
Seq	111	TranceC4	4 / 4	4	140	:
Seq	112	TranceG4	4 / 4	4	140	:
Seq	113	TranceF5	4 / 4	1	140	:
Seq	114	TranceG5	4 / 4	4	140	:
Seq	115	TranceD6	4 / 4	4	140	:
Seq	116	Dream D1	4 / 4	1	136	:
Seq	117	Dream F1	4 / 4	1	136	:
Seq	118	Dream B2	4 / 4	1	136	:
Seq	119	Dream E2	4 / 4	1	136	:
Seq	120	Dream F2	4 / 4	1	136	:
Seq	121	Dream C3	4 / 4	1	136	:
Seq	122	Ibiza E1	4 / 4	2	135	:
Seq	123	Ibiza A1	4 / 4	8	135	:
Seq	124	Ibiza C2	4 / 4	2	135	:
Seq	125	Ibiza E2	4 / 4	2	135	:
Seq	126	Ibiza C3	4 / 4	2	135	:
Seq	127	Ibiza D3	4 / 4	2	135	:
Seq	128	ChllOutD	4 / 4	4	79	:
Seq	129	ChllOutE	4 / 4	2	79	:
Seq	130	ChllOutH	4 / 4	1	79	:
Seq	131	SynPop1B	4 / 4	1	90	:
Seq	132	SynPop1C	4 / 4	1	90	:
Seq	133	SynPop1E	4 / 4	1	90	:
Seq	134	SynPop1A	4 / 4	1	90	:
Seq	135	SynPop1F	4 / 4	1	90	:
Seq	136	RetroPpB	4 / 4	1	126	:
Seq	137	RetroPpD	4 / 4	2	126	:
Seq	138	RetroPpF	4 / 4	1	100	:
Seq	139	Disco C	4 / 4	2	110	:
Seq	140	Disco D	4 / 4	2	110	:
Seq	141	LatinHsB	4 / 4	4	138	:
Seq	142	LatinHsC	4 / 4	2	138	:
ChSq	001	ChdAltB1	4 / 4	1	120	:
ChSq	002	ChdAltB2	4 / 4	1	120	:
ChSq	003	ChdAltB4	4 / 4	1	120	:
ChSq	004	ChdRndm1	4 / 4	1	120	:
ChSq	005	ChdRndm2	4 / 4	1	120	:
ChSq	006	ChdRndm4	4 / 4	1	120	:

Категория	№ Арпеджио	Наименование арпеджио	Размер	Длина	Исходный темп	Тип голоса
ChSq	007	SynChd1	4 / 4	1	130	Syn Comp/Lead
ChSq	008	SynChd2	4 / 4	1	90	:
ChSq	009	SynChd3	4 / 4	1	120	:
ChSq	010	SynChd4	4 / 4	1	130	:
ChSq	011	SynChd5	4 / 4	1	130	:
ChSq	012	SynChd6	4 / 4	1	130	:
ChSq	013	SynChd7	4 / 4	1	130	:
ChSq	014	SynChd8	4 / 4	1	90	:
ChSq	015	SynChd9	4 / 4	1	120	:
ChSq	016	SynChd10	4 / 4	1	116	:
ChSq	017	SynChd11	4 / 4	4	130	:
ChSq	018	SynChd12	4 / 4	1	124	:
ChSq	019	SynChd13	4 / 4	1	140	:
ChSq	020	SynChd14	4 / 4	2	130	:
ChSq	021	SynChd15	4 / 4	2	134	:
ChSq	022	SynChd16	4 / 4	1	138	:
ChSq	023	Syncopa2	4 / 4	2	120	:
ChSq	024	TekEcho2	4 / 4	2	120	:
ChSq	025	Rosync	4 / 4	1	120	:
ChSq	026	Fugue	4 / 4	2	120	:
ChSq	027	Dream A	4 / 4	2	136	:
ChSq	028	Ibiza B	4 / 4	1	135	:
ChSq	029	Ibiza C	4 / 4	2	135	:
ChSq	030	Ibiza D	4 / 4	2	135	:
ChSq	031	Ibiza E	4 / 4	2	135	:
ChSq	032	Ibiza A	4 / 4	8	135	:
ChSq	033	Ibiza G	4 / 4	1	135	:
ChSq	034	Ibiza H	4 / 4	1	135	:
ChSq	035	Garage2C	4 / 4	2	127	:
ChSq	036	Garage2D	4 / 4	2	127	:
ChSq	037	Garage2E	4 / 4	2	127	:
ChSq	038	Garage2A	4 / 4	2	127	:
ChSq	039	Garage2F	4 / 4	2	127	:
ChSq	040	ChllOutB	4 / 4	2	79	:
ChSq	041	ChllOutC	4 / 4	2	79	:
ChSq	042	ChllOutG	4 / 4	1	79	:
HySq	001	Hybrid1	4 / 4	1	130	:
HySq	002	Hybrid2	4 / 4	1	130	:
HySq	003	Hybrid3	4 / 4	1	130	:
HySq	004	Hybrid4	4 / 4	1	130	:
HySq	005	Hybrid5	4 / 4	1	95	:
HySq	006	Hybrid6	4 / 4	1	130	:
HySq	007	Hybrid7	4 / 4	1	130	:
HySq	008	Hybrid8	4 / 4	1	90	:
HySq	009	Hybrid9	4 / 4	1	130	:
HySq	010	Hybrid10	4 / 4	1	130	:
HySq	011	Hybrid11	4 / 4	1	130	:
HySq	012	Hybrid12	4 / 4	1	90	:
HySq	013	Hybrid13	4 / 4	1	130	:
HySq	014	Hybrid14	4 / 4	1	130	:
HySq	015	Hybrid15	4 / 4	1	130	:
HySq	016	Hybrid16	4 / 4	1	106	:
HySq	017	Hybrid17	4 / 4	1	130	:
HySq	018	Hybrid18	4 / 4	1	110	:
HySq	019	Hybrid19	4 / 4	1	100	:
HySq	020	Hybrid20	4 / 4	1	116	:
HySq	021	Hybr1CF1	4 / 4	1	130	:
HySq	022	Hybr1CF2	4 / 4	1	130	:
HySq	023	Hybr1CF3	4 / 4	1	130	:
HySq	024	Hybr1CF4	4 / 4	1	130	:
HySq	025	Hybr3 CF	4 / 4	1	120	:
HySq	026	Hybr21CF	4 / 4	1	100	:
HySq	027	Hybr22CF	4 / 4	1	138	:
HySq	028	Hybr23CF	4 / 4	1	130	:
HySq	029	Hybr24CF	4 / 4	1	130	:
HySq	030	Hybr25CF	4 / 4	1	96	:
HySq	031	HybVel 1*	4 / 4	1	96	:
HySq	032	HybVel 2*	4 / 4	1	96	:
HySq	033	HybVel 3*	4 / 4	1	96	:
HySq	034	HybVel 4*	4 / 4	1	96	:
HySq	035	HybVel 5*	4 / 4	1	96	:
HySq	036	HybVel 6*	4 / 4	1	96	:
HySq	037	HybVel 7*	4 / 4	1	96	:
HySq	038	HybVel 8*	4 / 4	1	96	:
HySq	039	HybVel 9*	4 / 4	2	120	:
HySq	040	HybVel10*	4 / 4	2	120	:

Категория	№ Арпеджио	Наименование арпеджио	Размер	Длина	Исходный темп	Тип голоса
HySq	041	HybVel11*	4 / 4	2	120	Syn Comp/Lead
HySq	042	HybVel12*	4 / 4	2	120	:
HySq	043	HybVel13*	4 / 4	2	120	:
HySq	044	HybVel14*	4 / 4	2	120	:
HySq	045	HybVel15*	4 / 4	2	120	:
HySq	046	HybVel16*	4 / 4	2	120	:
ApKb	001	PfArp1	4 / 4	2	64	A.Piano/E.Piano
ApKb	002	PfArp2	4 / 4	2	74	:
ApKb	003	PfArp3	4 / 4	2	124	:
ApKb	004	PfArp4	4 / 4	2	130	:
ApKb	005	PfArp5	4 / 4	2	130	:
ApKb	006	PfArp6	4 / 4	2	130	:
ApKb	007	PfArp7	4 / 4	2	130	:
ApKb	008	PfArp8	4 / 4	2	65	:
ApKb	009	PfArp9	4 / 4	1	116	:
ApKb	010	PfArp10	4 / 4	1	96	:
ApKb	011	PfArp11	4 / 4	1	82	:
ApKb	012	PfArp12	4 / 4	1	90	:
ApKb	013	PfArp13	4 / 4	1	90	:
ApKb	014	PfArp14	4 / 4	1	90	:
ApKb	015	PfArp15	4 / 4	1	90	:
ApKb	016	PfArp16	4 / 4	1	90	:
ApKb	017	PfArp17	4 / 4	1	100	:
ApKb	018	PfArp18	4 / 4	1	90	:
ApKb	019	PfArp19	4 / 4	1	84	:
ApKb	020	PfArp20	4 / 4	1	90	:
ApKb	021	PfArp21	4 / 4	1	86	:
ApKb	022	PfArp22	4 / 4	1	90	:
ApKb	023	PfArp23	4 / 4	1	90	:
ApKb	024	PfArp24	4 / 4	2	130	:
ApKb	025	PfArp25	4 / 4	2	130	:
ApKb	026	PfArp26	4 / 4	2	130	:
ApKb	027	PfArp27	4 / 4	2	130	:
ApKb	028	PfArp28	4 / 4	2	120	:
ApKb	029	PfArp29	4 / 4	1	74	:
ApKb	030	BlldEP1	4 / 4	2	74	Electric Piano
ApKb	031	BlldEP2	4 / 4	2	74	:
ApKb	032	BlldEP3	4 / 4	2	74	:
ApKb	033	EpChords	4 / 4	2	101	:
ApKb	034	SwingEP	4 / 4	1	101	:
ApKb	035	Clavi1	4 / 4	1	110	Clavi
ApKb	036	Clavi2	4 / 4	1	110	:
ApKb	037	Clavi3	4 / 4	1	110	:
ApKb	038	Clavi4	4 / 4	1	124	:
ApKb	039	Clavi5	4 / 4	1	124	:
ApKb	040	Clavi6	4 / 4	1	124	:
ApKb	041	Clavi7	4 / 4	1	124	:
ApKb	042	SuperClv	4 / 4	4	101	:
ApKb	043	TouchClv	4 / 4	1	101	:
ApKb	044	SynClavi	4 / 4	1	126	:
ApKb	045	RocknPf	4 / 4	4	130	Acoustic Piano
ApKb	046	70sRockB	4 / 4	2	130	:
ApKb	047	70sRockC	4 / 4	1	130	:
ApKb	048	70sRockD	4 / 4	2	130	:
ApKb	049	70sRockE	4 / 4	4	130	:
ApKb	050	70sRockF	4 / 4	2	130	:
ApKb	051	70sRockG	4 / 4	1	130	:
ApKb	052	70sRockH	4 / 4	1	130	:
ApKb	053	PnClubD1	4 / 4	1	96	:
ApKb	054	PnClubE1	4 / 4	1	96	:
ApKb	055	PnClubA1	4 / 4	1	96	:
ApKb	056	PnClubE2	4 / 4	2	96	:
ApKb	057	PnClubA2	4 / 4	2	96	:
ApKb	058	PnClubD3	4 / 4	2	96	Electric Piano
ApKb	059	PnClubA3	4 / 4	2	96	:
ApKb	060	Slowfl B	4 / 4	1	74	:
ApKb	061	Slowfl C	4 / 4	1	74	:
ApKb	062	Slowfl D	4 / 4	1	74	:
ApKb	063	Slowfl E	4 / 4	1	74	:
ApKb	064	Slowfl F	4 / 4	1	74	:
ApKb	065	Slowfl H	4 / 4	1	74	:
ApKb	066	AnaPopC1	4 / 4	2	93	:
ApKb	067	AnaPopD2	4 / 4	2	93	Clavi
ApKb	068	AnaPopA2	4 / 4	1	93	:
ApKb	069	Soul B	4 / 4	2	117	Acoustic Piano
ApKb	070	Soul C	4 / 4	1	117	:

Категория	№ Арпеджио	Наименование арпеджио	Размер	Длина	Исходный темп	Тип голоса
ApKb	071	Soul D	4 / 4	4	117	Acoustic Piano
ApKb	072	Soul E	4 / 4	4	117	:
ApKb	073	Soul F	4 / 4	4	117	:
ApKb	074	CoolFnkE	4 / 4	2	96	Electric Piano
ApKb	075	CoolFnkA	4 / 4	2	96	:
ApKb	076	CoolFnkG	4 / 4	1	96	:
ApKb	077	CoolFnkH	4 / 4	1	96	:
ApKb	078	Smooth1C	4 / 4	2	115	:
ApKb	079	Smooth1D	4 / 4	2	115	:
ApKb	080	HipHp1B1	4 / 4	2	105	Harpsichord
ApKb	081	HipHp1C1	4 / 4	2	105	:
ApKb	082	HipHp1D1	4 / 4	2	105	:
ApKb	083	HipHp1H1	4 / 4	1	105	:
ApKb	084	HipHp1B2	4 / 4	2	105	Clavi
ApKb	085	HipHp1C2	4 / 4	2	105	:
ApKb	086	HipHp1D2	4 / 4	2	105	:
ApKb	087	HipHp1H2	4 / 4	1	105	:
ApKb	088	HipHop2F	4 / 4	2	94	:
ApKb	089	ClsHipB1	4 / 4	1	90	Acoustic Piano
ApKb	090	ClsHipC1	4 / 4	1	90	:
ApKb	091	ClsHipA2	4 / 4	2	90	Electric Piano
ApKb	092	NewGos B	4 / 4	2	90	:
ApKb	093	NewGos C	4 / 4	2	90	:
ApKb	094	NewGos D	4 / 4	2	90	:
ApKb	095	NewGos E	4 / 4	2	90	:
ApKb	096	NewGos F	4 / 4	2	90	:
ApKb	097	NewGos G	4 / 4	1	90	:
ApKb	098	6/8R&BB1	4 / 4	2	61	Acoustic Piano
ApKb	099	6/8R&BC1	4 / 4	2	61	:
ApKb	100	6/8R&BD1	4 / 4	2	61	:
ApKb	101	6/8R&BE1	4 / 4	2	61	:
ApKb	102	6/8R&BA1	4 / 4	2	61	:
ApKb	103	6/8R&BG1	4 / 4	1	61	:
ApKb	104	6/8R&BH1	4 / 4	1	61	:
ApKb	105	6/8R&BB2	4 / 4	2	61	Electric Piano
ApKb	106	6/8R&BC2	4 / 4	2	61	:
ApKb	107	6/8R&BD2	4 / 4	2	61	:
ApKb	108	6/8R&BE2	4 / 4	2	61	:
ApKb	109	6/8R&BA2	4 / 4	2	61	:
ApKb	110	6/8R&BG2	4 / 4	1	61	:
ApKb	111	6/8R&BH2	4 / 4	1	61	:
ApKb	112	CmbJazzB	4 / 4	4	204	Acoustic Piano
ApKb	113	CmbJazzC	4 / 4	4	204	:
ApKb	114	CmbJazzD	4 / 4	4	204	:
ApKb	115	CmbJazzE	4 / 4	4	204	:
ApKb	116	CmbJazzG	4 / 4	1	204	:
ApKb	117	ClubHs E	4 / 4	1	128	Electric Piano
ApKb	118	ClubHs F	4 / 4	2	128	:
ApKb	119	Garage2B	4 / 4	2	127	:
ApKb	120	Disco B	4 / 4	2	110	:
ApKb	121	Disco E	4 / 4	2	110	:
ApKb	122	Disco F	4 / 4	2	110	:
ApKb	123	Disco H	4 / 4	1	110	:
ApKb	124	HousePf1	4 / 4	2	130	Acoustic Piano
ApKb	125	HousePf2	4 / 4	1	130	:
ApKb	126	HousePf3	4 / 4	1	130	:
ApKb	127	HousePf4	4 / 4	1	130	:
ApKb	128	HousePf5	4 / 4	1	130	:
ApKb	129	DAHouse	4 / 4	2	120	:
ApKb	130	LatinHsA	4 / 4	2	138	:
ApKb	131	LatinHsF	4 / 4	2	138	:
ApKb	132	LatinHsG	4 / 4	2	138	:
ApKb	133	LatnRkB1	4 / 4	2	120	:
ApKb	134	LatnRkE1	4 / 4	4	120	:
ApKb	135	LatnRkH1	4 / 4	1	120	:
ApKb	136	LatnRkD2	4 / 4	2	120	:
ApKb	137	LatnRkG2	4 / 4	1	120	:
ApKb	138	Samba B	4 / 4	1	114	:
ApKb	139	Samba C	4 / 4	4	114	:
ApKb	140	Samba D	4 / 4	4	114	:
ApKb	141	PnoLatin	4 / 4	2	120	:
ApKb	142	Salsa B	4 / 4	1	123	:
ApKb	143	Salsa C	4 / 4	1	123	:
ApKb	144	Salsa D	4 / 4	2	123	:
ApKb	145	Salsa E	4 / 4	4	123	:
ApKb	146	Salsa F	4 / 4	2	123	:

Категория	№ Арпеджио	Наименование арпеджио	Размер	Длина	Исходный темп	Тип голоса
ApKb	147	MontunoB	4 / 4	1	100	Acoustic Piano
ApKb	148	MontunoD	4 / 4	2	100	:
ApKb	149	MontunoE	4 / 4	2	100	:
ApKb	150	MontunoF	4 / 4	1	100	:
ApKb	151	MontunoG	4 / 4	1	100	:
ApKb	152	Regge2C1	4 / 4	2	92	Electric Piano
ApKb	153	Regge2E1	4 / 4	2	92	:
ApKb	154	Regge2G1	4 / 4	1	92	:
ApKb	155	Regge2H1	4 / 4	1	92	:
ApKb	156	Regge2B2	4 / 4	2	92	Clavi
ApKb	157	Regge2C2	4 / 4	2	92	:
ApKb	158	Regge2E2	4 / 4	2	92	:
ApKb	159	Regge2A2	4 / 4	2	92	:
ApKb	160	Regge2G2	4 / 4	1	92	:
Orgn	001	FunkOrg1**	4 / 4	2	110	Organ
Orgn	002	FunkOrg2**	4 / 4	2	110	:
Orgn	003	Funk2 C	4 / 4	4	130	:
Orgn	004	Soul B	4 / 4	1	117	:
Orgn	005	Soul C	4 / 4	4	117	:
Orgn	006	Soul H	4 / 4	1	117	:
Orgn	007	HipHop1E	4 / 4	2	105	:
Orgn	008	HipHop1F	4 / 4	2	105	:
Orgn	009	HouseOr1	4 / 4	1	130	:
Orgn	010	HouseOr2	4 / 4	1	130	:
Orgn	011	HouseOr3	4 / 4	1	130	:
Orgn	012	HouseOr4	4 / 4	1	130	:
Orgn	013	HouseOr5	4 / 4	2	126	:
Orgn	014	LatinOrg**	4 / 4	1	110	:
Orgn	015	LatinRkB	4 / 4	2	120	:
Orgn	016	LatinRkC	4 / 4	2	120	:
Orgn	017	ReggeOr1**	4 / 4	2	120	:
Orgn	018	ReggeOr2**	4 / 4	1	120	:
Orgn	019	Reggae1B	4 / 4	4	102	:
Orgn	020	Reggae1C	4 / 4	4	102	:
Orgn	021	Reggae1E	4 / 4	4	90	:
Orgn	022	Reggae1H	4 / 4	1	102	:
Orgn	023	Reggae2B	4 / 4	1	92	:
Orgn	024	Reggae2C	4 / 4	2	92	:
Orgn	025	Reggae2D	4 / 4	2	92	:
Orgn	026	Reggae2E	4 / 4	1	92	:
Orgn	027	Reggae2A	4 / 4	2	92	:
Orgn	028	Reggae2H	4 / 4	1	92	:
GtPl	001	Strum1	4 / 4	1	120	Acoustic Guitar
GtPl	002	Strum2	4 / 4	2	120	:
GtPl	003	Strum3	4 / 4	4	120	:
GtPl	004	Strum4	4 / 4	2	120	:
GtPl	005	Strum5	4 / 4	2	120	:
GtPl	006	Strum6	4 / 4	2	120	:
GtPl	007	Strum7	4 / 4	2	120	:
GtPl	008	Strum8	4 / 4	2	120	:
GtPl	009	Strum9	4 / 4	2	120	:
GtPl	010	Strum10	4 / 4	2	120	:
GtPl	011	RolliArp	4 / 4	4	60	:
GtPl	012	12Guitr1	4 / 4	1	97	:
GtPl	013	12Guitr2	4 / 4	1	100	:
GtPl	014	Pickin1	4 / 4	3	120	:
GtPl	015	Pickin2	4 / 4	2	120	:
GtPl	016	Pickin3	4 / 4	2	120	:
GtPl	017	Guit1Arp	4 / 4	1	120	:
GtPl	018	Guit2Arp	4 / 4	1	120	Clean Guitar
GtPl	019	Guit3Arp	4 / 4	1	120	:
GtPl	020	Guit4Arp	4 / 4	1	120	:
GtPl	021	CleanGt1	4 / 4	2	120	:
GtPl	022	CleanGt2	4 / 4	2	120	:
GtPl	023	CleanGt3	4 / 4	2	120	:
GtPl	024	CleanGt4	4 / 4	2	120	:
GtPl	025	Funky1	4 / 4	2	120	:
GtPl	026	Funky2	4 / 4	2	120	:
GtPl	027	Funky3	4 / 4	2	120	:
GtPl	028	Funky4	4 / 4	1	120	:
GtPl	029	FunkGtr	4 / 4	2	116	:
GtPl	030	Spanky	4 / 4	2	105	:
GtPl	031	News1	4 / 4	2	120	:
GtPl	032	News2	4 / 4	2	120	:
GtPl	033	RockGtr1	4 / 4	1	120	Od/Dist Guitar
GtPl	034	RockGtr2	4 / 4	1	120	:

Категория	№ Арпеджио	Наименование арпеджио	Размер	Длина	Исходный темп	Тип голоса
GtPl	035	RockGtr3	4 / 4	1	120	Od/Dist Guitar
GtPl	036	Lick1	4 / 4	4	120	:
GtPl	037	Lick2	4 / 4	4	120	:
GtPl	038	Lick3	4 / 4	4	120	:
GtPl	039	Lick4	4 / 4	2	120	:
GtPl	040	Lick5	4 / 4	4	120	:
GtPl	041	Lick6	4 / 4	1	120	:
GtPl	042	Slowfl B	4 / 4	1	74	Acoustic Guitar
GtPl	043	Slowfl C	4 / 4	1	74	:
GtPl	044	Slowfl E	4 / 4	1	74	Mute Guitar
GtPl	045	GtrPopB1	4 / 4	2	90	Acoustic Guitar
GtPl	046	GtrPopC1	4 / 4	1	90	:
GtPl	047	GtrPopD1	4 / 4	2	90	:
GtPl	048	GtrPopA1	4 / 4	1	90	:
GtPl	049	GtrPopB2	4 / 4	1	90	:
GtPl	050	GtrPopA2	4 / 4	1	90	:
GtPl	051	FngrPckB	4 / 4	2	94	:
GtPl	052	FngrPckC	4 / 4	2	94	:
GtPl	053	FngrPckD	4 / 4	2	94	:
GtPl	054	FngrPckE	4 / 4	3	94	:
GtPl	055	FngrPckA	4 / 4	1	94	:
GtPl	056	FngrPckG	4 / 4	1	94	:
GtPl	057	FngrPckH	4 / 4	1	94	:
GtPl	058	XovrRkD1	4 / 4	2	100	Distortion Gt
GtPl	059	XovrRkE1	4 / 4	2	100	:
GtPl	060	XovrRkF1	4 / 4	2	100	:
GtPl	061	XovrRkH1	4 / 4	1	100	:
GtPl	062	XovrRkB2	4 / 4	2	100	Jazz Guitar
GtPl	063	XovrRkC2	4 / 4	1	100	:
GtPl	064	XovrRkA2	4 / 4	2	100	:
GtPl	065	XovrRkG2	4 / 4	1	100	:
GtPl	066	Smooth1B	4 / 4	2	115	Acoustic Guitar
GtPl	067	Smooth1C	4 / 4	2	115	:
GtPl	068	Smooth1D	4 / 4	2	115	:
GtPl	069	Smooth1E	4 / 4	2	115	:
GtPl	070	Smooth1A	4 / 4	1	115	:
GtPl	071	Smooth1F	4 / 4	2	115	:
GtPl	072	Smooth1G	4 / 4	1	115	:
GtPl	073	Smooth1H	4 / 4	1	115	:
GtPl	074	NewR&B2B	4 / 4	2	90	:
GtPl	075	NewR&B2C	4 / 4	2	90	:
GtPl	076	NewR&B2D	4 / 4	2	90	:
GtPl	077	NewR&B2E	4 / 4	2	90	:
GtPl	078	FlpHp1B1	4 / 4	1	132	Mute Guitar
GtPl	079	FlpHp1C1	4 / 4	2	132	:
GtPl	080	FlpHp1D1	4 / 4	2	132	:
GtPl	081	FlpHp1E1	4 / 4	2	132	:
GtPl	082	FlpHp1F1	4 / 4	1	132	:
GtPl	083	FlpHp1G1	4 / 4	1	132	:
GtPl	084	FlpHp1B2	4 / 4	1	132	Acoustic Guitar
GtPl	085	FlpHp1C2	4 / 4	1	132	:
GtPl	086	FlpHp1F2	4 / 4	2	132	:
GtPl	087	HipHop2B	4 / 4	2	94	Mute Guitar
GtPl	088	HipHop2D	4 / 4	2	94	:
GtPl	089	HipHop2E	4 / 4	2	94	:
GtPl	090	HipHop2A	4 / 4	2	94	:
GtPl	091	HipHp3B1	4 / 4	2	104	Acoustic Guitar
GtPl	092	HipHp3C1	4 / 4	2	104	:
GtPl	093	HipHp3D1	4 / 4	2	104	:
GtPl	094	HipHp3E1	4 / 4	2	104	:
GtPl	095	HipHp3F1	4 / 4	2	104	:
GtPl	096	HipHp3B2	4 / 4	2	104	Mute Guitar
GtPl	097	HipHp3C2	4 / 4	2	104	:
GtPl	098	HipHp3E2	4 / 4	2	104	:
GtPl	099	HipHp3F2	4 / 4	2	104	:
GtPl	100	HipHp3G2	4 / 4	1	104	:
GtPl	101	NewGos B	4 / 4	2	90	:
GtPl	102	NewGos C	4 / 4	2	90	:
GtPl	103	NewGos D	4 / 4	2	90	:
GtPl	104	NewGos E	4 / 4	2	90	:
GtPl	105	NewGos A	4 / 4	1	90	:
GtPl	106	NewGos F	4 / 4	2	90	:
GtPl	107	NewGos G	4 / 4	1	90	:
GtPl	108	NewGos H	4 / 4	1	90	:
GtPl	109	6/8R&B E	4 / 4	2	61	Clean Guitar
GtPl	110	6/8R&B F	4 / 4	2	61	:

Категория	№ Арпеджио	Наименование арпеджио	Размер	Длина	Исходный темп	Тип голоса
GtPl	111	6/8R&B G	4 / 4	1	61	Clean Guitar
GtPl	112	6/8R&B H	4 / 4	1	61	:
GtPl	113	CmbJazzB	4 / 4	4	204	Jazz Guitar
GtPl	114	CmbJazzC	4 / 4	4	204	:
GtPl	115	CmbJazzD	4 / 4	4	204	:
GtPl	116	CmbJazzE	4 / 4	4	204	:
GtPl	117	CmbJazzA	4 / 4	4	204	:
GtPl	118	CmbJazzF	4 / 4	4	204	:
GtPl	119	CmbJazzG	4 / 4	1	204	:
GtPl	120	CmbJazzH	4 / 4	1	204	:
GtPl	121	ChllOutB	4 / 4	2	79	Clean Guitar
GtPl	122	Disco C	4 / 4	2	110	Mute Guitar
GtPl	123	Disco D	4 / 4	2	110	:
GtPl	124	Disco E	4 / 4	2	110	:
GtPl	125	Disco F	4 / 4	2	110	:
GtPl	126	Disco H	4 / 4	1	110	:
GtPl	127	LatinRkD	4 / 4	2	120	Clean Guitar
GtPl	128	LatinRkH	4 / 4	1	120	:
GtPl	129	LatinPH1	4 / 4	2	120	Acoustic Guitar
GtPl	130	LatinPH2	4 / 4	2	120	:
GtPl	131	LatinPH3	4 / 4	1	120	:
GtPl	132	Samba B	4 / 4	4	114	:
GtPl	133	Samba C	4 / 4	4	114	:
GtPl	134	Samba E	4 / 4	4	114	:
GtPl	135	Samba A	4 / 4	2	114	:
GtPl	136	MontunoB	4 / 4	2	100	:
GtPl	137	MontunoC	4 / 4	2	100	:
GtPl	138	MontnoD1	4 / 4	2	100	:
GtPl	139	MontnoD2	4 / 4	4	100	:
GtPl	140	MontnoE1	4 / 4	2	100	:
GtPl	141	MontnoE2	4 / 4	2	100	:
GtPl	142	MontunoA	4 / 4	2	100	:
GtPl	143	MontunoF	4 / 4	1	100	:
GtPl	144	MontunoG	4 / 4	1	100	:
GtPl	145	Regge1B1	4 / 4	1	102	Clean Guitar
GtPl	146	Regge1C1	4 / 4	2	102	:
GtPl	147	Regge1E1	4 / 4	2	90	:
GtPl	148	Regge1A1	4 / 4	1	102	:
GtPl	149	Regge1F1	4 / 4	2	96	:
GtPl	150	Regge1B2	4 / 4	4	102	Mute Guitar
GtPl	151	Regge1C2	4 / 4	4	102	:
GtPl	152	Reggae2B	4 / 4	2	92	Clean Guitar
GtPl	153	Reggae2C	4 / 4	1	92	:
GtPl	154	Reggae2A	4 / 4	2	92	:
GtPl	155	SpanshB1	4 / 4	2	120	Acoustic Guitar
GtPl	156	SpanshC1	4 / 4	2	120	:
GtPl	157	SpanshE1	4 / 4	2	120	:
GtPl	158	SpanshG1	4 / 4	1	120	:
GtPl	159	SpanshH1	4 / 4	1	120	:
GtPl	160	SpanshA2	4 / 4	4	120	:
GtPl	161	SpanshF2	4 / 4	3	120	:
GtPl	162	TurkshC1	4 / 4	2	105	Kanun
GtPl	163	TurkshE1	9 / 8	2	125	:
GtPl	164	TurkshA1	4 / 4	2	86	:
GtPl	165	TurkshF1	4 / 4	2	105	:
GtPl	166	TurkshG2	4 / 4	2	105	Oud
GtPl	167	TurkshB3	4 / 4	2	105	Saz
GtPl	168	Harp1	4 / 4	2	120	Harp
GtPl	169	Harp2	4 / 4	2	120	:
GtPl	170	Harp3	4 / 4	1	120	:
GtPl	171	Harp4	4 / 4	1	120	:
GtPl	172	NewR&B1D	4 / 4	1	97	:
GtPl	173	NewR&B1E	4 / 4	1	97	:
GtPl	174	HipHp3E3	4 / 4	2	104	:
GtKM	001	KM StGt1	4 / 4	4	138	"Mega Steel"
GtKM	002	KM StGt2	4 / 4	4	138	:
GtKM	003	KM StGt3	4 / 4	4	138	:
GtKM	004	KM StGt4	4 / 4	4	138	:
GtKM	005	Unplug B	4 / 4	4	120	:
GtKM	006	Unplug C	4 / 4	2	120	:
GtKM	007	Unplug D	4 / 4	2	120	:
GtKM	008	Unplug E	4 / 4	2	120	:
GtKM	009	Unplug G	4 / 4	1	120	:
GtKM	010	Unplug H	4 / 4	1	120	:
GtKM	011	FolkRkB1	4 / 4	2	118	:
GtKM	012	FolkRkC1	4 / 4	2	118	:

Категория	№ Арпеджио	Наименование арпеджио	Размер	Длина	Исходный темп	Тип голоса
GtKM	013	FolkRkA1	4 / 4	1	118	“Mega Steel”
GtKM	014	SoftRkB1	4 / 4	4	75	:
GtKM	015	SoftRkC1	4 / 4	4	75	:
GtKM	016	SoftRkD1	4 / 4	2	75	:
GtKM	017	SoftRkE1	4 / 4	2	75	:
GtKM	018	SoftRkA1	4 / 4	1	75	:
GtKM	019	SoftRkG1	4 / 4	1	75	:
GtKM	020	SoftRkH1	4 / 4	1	75	:
GtKM	021	FngrPckB	4 / 4	2	94	:
GtKM	022	FngrPckC	4 / 4	2	94	:
GtKM	023	FngrPckD	4 / 4	2	94	:
GtKM	024	FngrPckE	4 / 4	2	94	:
GtKM	025	FngrPckA	4 / 4	2	94	:
GtKM	026	FngrPckG	4 / 4	1	94	:
GtKM	027	FngrPckH	4 / 4	1	94	:
GtKM	028	NewR&B1B	4 / 4	1	97	:
GtKM	029	NewR&B1C	4 / 4	1	97	:
GtKM	030	NewR&B1D	4 / 4	1	97	:
GtKM	031	NewR&B1A	4 / 4	2	97	:
GtKM	032	NewR&B1G	4 / 4	1	97	:
GtKM	033	NewR&B1H	4 / 4	1	97	:
GtKM	034	ChllOutB	4 / 4	1	79	:
GtKM	035	ChllOutD	4 / 4	2	79	:
GtKM	036	ChllOutE	4 / 4	2	79	:
GtKM	037	ChllOutC	4 / 4	2	79	:
GtKM	038	RtroPpB1	4 / 4	2	126	:
GtKM	039	LatinRkC	4 / 4	1	120	:
GtKM	040	LatinRkD	4 / 4	2	120	:
GtKM	041	SpanishB	4 / 4	2	120	:
GtKM	042	SpanishC	4 / 4	2	120	:
GtKM	043	SpanishD	4 / 4	2	120	:
GtKM	044	SpanishE	4 / 4	2	120	:
GtKM	045	SpanishA	4 / 4	4	120	:
GtKM	046	SpanishG	4 / 4	1	120	:
GtKM	047	SpanishH	4 / 4	1	120	:
GtKM	048	KM 12Gt1	4 / 4	4	118	“Mega 12str”
GtKM	049	KM 12Gt2	4 / 4	4	118	:
GtKM	050	KM 12Gt3	4 / 4	4	118	:
GtKM	051	KM 12Gt4	4 / 4	4	118	:
GtKM	052	KM 12Gt5	4 / 4	4	118	:
GtKM	053	FolkRkB2	4 / 4	2	118	:
GtKM	054	FolkRkC2	4 / 4	2	118	:
GtKM	055	FolkRkD2	4 / 4	2	118	:
GtKM	056	FolkRkA2	4 / 4	1	118	:
GtKM	057	KM ClGt1	4 / 4	4	107	“Mega Clean”
GtKM	058	KM ClGt2	4 / 4	4	107	:
GtKM	059	KM ClGt3	4 / 4	4	107	:
GtKM	060	KM ClGt4	4 / 4	4	107	:
GtKM	061	KM ClGt5	4 / 4	4	107	:
GtKM	062	Funk2 B	4 / 4	2	130	:
GtKM	063	Funk2 C	4 / 4	2	130	:
GtKM	064	Funk2 D	4 / 4	1	130	:
GtKM	065	Funk2 E	4 / 4	2	130	:
GtKM	066	Funk2 A	4 / 4	2	130	:
GtKM	067	Funk2 F	4 / 4	1	130	:
GtKM	068	Funk2 H	4 / 4	1	130	:
GtKM	069	Funk3 B	4 / 4	2	132	:
GtKM	070	Funk3 C	4 / 4	1	132	:
GtKM	071	Funk3 D	4 / 4	1	132	:
GtKM	072	Funk3 E	4 / 4	4	132	:
GtKM	073	Funk3 A	4 / 4	1	132	:
GtKM	074	Funk3 F	4 / 4	2	132	:
GtKM	075	Funk3 H	4 / 4	1	132	:
GtKM	076	CoolFnkB	4 / 4	2	96	:
GtKM	077	CoolFnkC	4 / 4	1	96	:
GtKM	078	CoolFnkE	4 / 4	2	96	:
GtKM	079	CoolFnkA	4 / 4	2	96	:
GtKM	080	CoolFnkF	4 / 4	1	96	:
GtKM	081	Soul B	4 / 4	1	117	:
GtKM	082	Soul C	4 / 4	1	117	:
GtKM	083	Soul D	4 / 4	1	117	:
GtKM	084	Soul E	4 / 4	4	117	:
GtKM	085	Soul F	4 / 4	4	117	:
GtKM	086	ClsHipC1	4 / 4	2	90	:
GtKM	087	ClsHipD1	4 / 4	2	90	:
GtKM	088	ClsHipB2	4 / 4	2	90	:

Категория	№ Арпеджио	Наименование арпеджио	Размер	Длина	Исходный темп	Тип голоса
GtKM	089	ClsHipC2	4 / 4	2	90	“Mega Clean”
GtKM	090	ClsHipD2	4 / 4	2	90	:
GtKM	091	ClsHipA2	4 / 4	4	90	:
GtKM	092	ClsHipE3	4 / 4	2	90	:
GtKM	093	ClsHipF3	4 / 4	2	90	:
GtKM	094	70sRckB1	4 / 4	2	130	:
GtKM	095	70sRckC1	4 / 4	2	130	:
GtKM	096	70sRckD1	4 / 4	4	130	:
GtKM	097	70sRckE1	4 / 4	2	130	:
GtKM	098	FolkRkD3	4 / 4	2	118	:
GtKM	099	FolkRkE3	4 / 4	2	118	:
GtKM	100	FolkRkG3	4 / 4	1	118	:
GtKM	101	AnaPop B	4 / 4	2	93	:
GtKM	102	AnaPop D	4 / 4	1	93	:
GtKM	103	AnaPop A	4 / 4	1	93	:
GtKM	104	ClubHs B	4 / 4	2	128	:
GtKM	105	ClubHs C	4 / 4	2	128	:
GtKM	106	ClubHs D	4 / 4	2	128	:
GtKM	107	ClubHs E	4 / 4	2	128	:
GtKM	108	ClubHs A	4 / 4	4	128	:
GtKM	109	ClubHs F	4 / 4	4	128	:
GtKM	110	ClubHs G	4 / 4	1	128	:
GtKM	111	ClubHs H	4 / 4	1	128	:
GtKM	112	RtroPpB2	4 / 4	2	126	:
GtKM	113	KM OdGt1	4 / 4	4	120	“Riff Rock”
GtKM	114	KM OdGt2	4 / 4	4	120	:
GtKM	115	KM OdGt3	4 / 4	4	120	:
GtKM	116	KM OdGt4	4 / 4	4	120	:
GtKM	117	KM OdGt5	4 / 4	4	120	:
GtKM	118	70sRckC2	4 / 4	4	130	:
GtKM	119	70sRckD2	4 / 4	2	130	:
GtKM	120	70sRckE2	4 / 4	2	130	:
GtKM	121	70sRckF2	4 / 4	2	130	:
GtKM	122	70sRckB3	4 / 4	2	130	“Mega Dist”
GtKM	123	70sRckC3	4 / 4	2	130	:
GtKM	124	70sRckD3	4 / 4	1	130	:
GtKM	125	70sRckE3	4 / 4	4	130	:
GtKM	126	SoftRkE2	4 / 4	2	75	:
GtKM	127	SoftRkH2	4 / 4	1	75	:
GtKM	128	OverTop1	4 / 4	2	120	“OverTheTop”
GtKM	129	OverTop2	4 / 4	2	120	:
GtKM	130	OverTop3	4 / 4	2	120	:
GtKM	131	OverTop4	4 / 4	4	120	:
GtKM	132	OverTop5	4 / 4	4	120	:
Bass	001	FngrBas1	4 / 4	1	115	Finger Bass
Bass	002	FngrBas2	4 / 4	1	115	:
Bass	003	FngrBas3	4 / 4	3	115	:
Bass	004	FngrBas4	4 / 4	1	115	:
Bass	005	FngrBas5	4 / 4	1	115	:
Bass	006	FngrBas6	4 / 4	1	115	:
Bass	007	FngrBas7	4 / 4	2	120	:
Bass	008	FngrBas8	4 / 4	2	150	:
Bass	009	FngrBas9	4 / 4	2	150	:
Bass	010	FngrBa10	4 / 4	2	89	:
Bass	011	FngrBa11	4 / 4	2	89	:
Bass	012	FngrBa12	4 / 4	1	115	:
Bass	013	FngrBa13	4 / 4	1	115	:
Bass	014	FngrBa14	4 / 4	1	115	:
Bass	015	PnoClubB	4 / 4	2	96	:
Bass	016	PnoClubC	4 / 4	2	96	:
Bass	017	PnoClubD	4 / 4	2	96	:
Bass	018	PnoClubE	4 / 4	1	96	:
Bass	019	PnoClubA	4 / 4	2	96	:
Bass	020	PnoClubF	4 / 4	4	96	:
Bass	021	PnoClubG	4 / 4	1	96	:
Bass	022	PnoClubH	4 / 4	1	96	:
Bass	023	CoolFnkB	4 / 4	2	96	:
Bass	024	CoolFnkC	4 / 4	2	96	:
Bass	025	CoolFnkD	4 / 4	2	96	:
Bass	026	CoolFnkE	4 / 4	4	96	:
Bass	027	CoolFnkA	4 / 4	2	96	:
Bass	028	CoolFnkF	4 / 4	1	96	:
Bass	029	CoolFnkG	4 / 4	1	96	:
Bass	030	CoolFnkH	4 / 4	1	96	:
Bass	031	SlapBas1	4 / 4	3	120	Slap Bass
Bass	032	SlapBas2	4 / 4	1	120	:

Категория	№ Арпеджио	Наименование арпеджио	Размер	Длина	Исходный темп	Тип голоса
Bass	033	Walkin	4 / 4	3	103	Acoustic Bass
Bass	034	CmbJazB1	4 / 4	4	204	:
Bass	035	CmbJazB2	4 / 4	4	204	:
Bass	036	CmbJazB3	4 / 4	4	204	:
Bass	037	CmbJazB4	4 / 4	4	204	:
Bass	038	CmbJazC1	4 / 4	4	204	:
Bass	039	CmbJazC2	4 / 4	4	204	:
Bass	040	CmbJazC3	4 / 4	4	204	:
Bass	041	CmbJazC4	4 / 4	4	204	:
Bass	042	CmbJazD1	4 / 4	4	204	:
Bass	043	CmbJazD2	4 / 4	4	204	:
Bass	044	CmbJazD3	4 / 4	4	204	:
Bass	045	CmbJazD4	4 / 4	4	204	:
Bass	046	CmbJazE1	4 / 4	4	204	:
Bass	047	CmbJazE2	4 / 4	4	204	:
Bass	048	CmbJazE3	4 / 4	4	204	:
Bass	049	CmbJazE4	4 / 4	4	204	:
Bass	050	CmbJazzA	4 / 4	4	204	:
Bass	051	CmbJazzF	4 / 4	4	204	:
Bass	052	CmbJazzG	4 / 4	1	204	:
Bass	053	CmbJazzH	4 / 4	1	204	:
Bass	054	GruvBass	4 / 4	2	120	Synth Bass
Bass	055	SynBass1	4 / 4	1	120	:
Bass	056	SynBass2	4 / 4	1	120	:
Bass	057	SynBass3	4 / 4	1	120	:
Bass	058	SynBass4	4 / 4	1	120	:
Bass	059	SynBass5	4 / 4	1	120	:
Bass	060	NewR&B1B	4 / 4	1	97	:
Bass	061	NewR&B1C	4 / 4	1	97	:
Bass	062	NewR&B1D	4 / 4	1	97	:
Bass	063	NewR&B1E	4 / 4	1	97	:
Bass	064	NewR&B1A	4 / 4	2	97	:
Bass	065	NewR&B1F	4 / 4	2	97	:
Bass	066	NewR&B1G	4 / 4	1	97	:
Bass	067	NewR&B1H	4 / 4	1	97	:
Bass	068	NewR&B2C	4 / 4	2	90	:
Bass	069	NewR&B2D	4 / 4	2	90	:
Bass	070	NewR&B2E	4 / 4	2	90	:
Bass	071	NewR&B2A	4 / 4	2	90	:
Bass	072	NewR&B2F	4 / 4	2	90	:
Bass	073	NewR&B2G	4 / 4	1	90	:
Bass	074	NewR&B2H	4 / 4	1	90	:
Bass	075	FlipHp1B	4 / 4	2	132	:
Bass	076	FlipHp1C	4 / 4	2	132	:
Bass	077	FlipHp1D	4 / 4	2	132	:
Bass	078	FlipHp1E	4 / 4	2	132	:
Bass	079	FlipHp1A	4 / 4	2	132	:
Bass	080	HipHop1B	4 / 4	2	105	:
Bass	081	HipHop1C	4 / 4	2	105	:
Bass	082	HipHop1D	4 / 4	2	105	:
Bass	083	HipHop1E	4 / 4	2	105	:
Bass	084	HipHop1F	4 / 4	2	105	:
Bass	085	HipHop1G	4 / 4	1	105	:
Bass	086	HipHop1H	4 / 4	1	105	:
Bass	087	HipHop2B	4 / 4	2	94	:
Bass	088	HipHop2C	4 / 4	2	94	:
Bass	089	HipHop2D	4 / 4	2	94	:
Bass	090	HipHop2E	4 / 4	2	94	:
Bass	091	HipHop2F	4 / 4	2	94	:
Bass	092	HipHop2G	4 / 4	1	94	:
Bass	093	HipHop2H	4 / 4	1	94	:
Bass	094	HipHop3B	4 / 4	2	104	:
Bass	095	HipHop3C	4 / 4	2	104	:
Bass	096	HipHop3D	4 / 4	2	104	:
Bass	097	HipHop3E	4 / 4	2	104	:
Bass	098	HipHop3F	4 / 4	2	104	:
Bass	099	ClscHipB	4 / 4	2	90	:
Bass	100	ClscHipC	4 / 4	2	90	:
Bass	101	ClscHipD	4 / 4	2	90	:
Bass	102	ClscHipE	4 / 4	2	90	:
Bass	103	ClscHipF	4 / 4	1	90	:
Bass	104	Smooth1B	4 / 4	2	115	:
Bass	105	Smooth1C	4 / 4	2	115	:
Bass	106	Smooth1D	4 / 4	2	115	:
Bass	107	Smooth1E	4 / 4	2	115	:
Bass	108	Smooth1F	4 / 4	2	115	:

Категория	№ Арпеджио	Наименование арпеджио	Размер	Длина	Исходный темп	Тип голоса
Bass	109	Smooth1G	4 / 4	1	115	Synth Bass
Bass	110	Smooth1H	4 / 4	1	115	:
Bass	111	NewGos B	4 / 4	2	90	:
Bass	112	NewGos C	4 / 4	2	90	:
Bass	113	NewGos D	4 / 4	2	90	:
Bass	114	NewGos E	4 / 4	2	90	:
Bass	115	NewGos F	4 / 4	2	90	:
Bass	116	NewGos G	4 / 4	1	90	:
Bass	117	6/8R&B B	4 / 4	2	61	:
Bass	118	6/8R&B D	4 / 4	2	61	:
Bass	119	6/8R&B E	4 / 4	2	61	:
Bass	120	6/8R&B F	4 / 4	2	61	:
Bass	121	6/8R&B G	4 / 4	1	61	:
Bass	122	6/8R&B H	4 / 4	1	61	:
Bass	123	GtrPop B	4 / 4	2	90	Finger Bass
Bass	124	GtrPop C	4 / 4	1	90	:
Bass	125	GtrPop D	4 / 4	2	90	:
Bass	126	GtrPop E	4 / 4	2	90	:
Bass	127	GtrPop F	4 / 4	2	90	:
Bass	128	GtrPop H	4 / 4	1	90	:
Bass	129	70sRockC	4 / 4	4	130	:
Bass	130	70sRockD	4 / 4	2	130	:
Bass	131	70sRockE	4 / 4	4	130	:
Bass	132	70sRockG	4 / 4	1	130	:
Bass	133	XovrRckB	4 / 4	1	100	:
Bass	134	XovrRckC	4 / 4	1	100	:
Bass	135	XovrRckD	4 / 4	2	100	:
Bass	136	XovrRckE	4 / 4	2	100	:
Bass	137	XovrRckA	4 / 4	2	100	:
Bass	138	XovrRckF	4 / 4	2	100	:
Bass	139	XovrRckH	4 / 4	1	100	:
Bass	140	AcidBas1	4 / 4	1	86	Synth Bass
Bass	141	AcidBas2	4 / 4	1	120	:
Bass	142	TekBass1	4 / 4	1	138	:
Bass	143	TekBass2	4 / 4	1	138	:
Bass	144	TekBass3	4 / 4	8	138	:
Bass	145	Trance B	4 / 4	1	140	:
Bass	146	Trance F	4 / 4	4	140	:
Bass	147	Trance G	4 / 4	1	140	:
Bass	148	Dream B	4 / 4	2	136	:
Bass	149	Dream C	4 / 4	1	136	:
Bass	150	Dream D	4 / 4	4	136	:
Bass	151	Dream E	4 / 4	4	136	:
Bass	152	Dream G	4 / 4	1	136	:
Bass	153	Ibiza B	4 / 4	2	135	:
Bass	154	Ibiza C	4 / 4	2	135	:
Bass	155	Ibiza D	4 / 4	2	135	:
Bass	156	Ibiza E	4 / 4	2	135	:
Bass	157	Ibiza A	4 / 4	1	135	:
Bass	158	Ibiza F	4 / 4	4	135	:
Bass	159	HouseBas	4 / 4	4	120	:
Bass	160	ClubHs B	4 / 4	1	128	:
Bass	161	ClubHs C	4 / 4	1	128	:
Bass	162	ClubHs D	4 / 4	1	128	:
Bass	163	ClubHs E	4 / 4	1	128	:
Bass	164	ClubHs A	4 / 4	1	128	:
Bass	165	ClubHs G	4 / 4	1	128	:
Bass	166	ClubHs H	4 / 4	1	128	:
Bass	167	Garage2B	4 / 4	2	127	:
Bass	168	Garage2C	4 / 4	2	127	:
Bass	169	Garage2D	4 / 4	2	127	:
Bass	170	Garage2E	4 / 4	2	127	:
Bass	171	Garage2A	4 / 4	2	127	:
Bass	172	Garage2F	4 / 4	2	127	:
Bass	173	ChllOutC	4 / 4	2	79	Finger Bass
Bass	174	ChllOutD	4 / 4	4	79	:
Bass	175	ChllOutE	4 / 4	1	79	:
Bass	176	ChllOutA	4 / 4	3	79	:
Bass	177	ChllOutF	4 / 4	4	79	:
Bass	178	ChllOutG	4 / 4	1	79	Finger Bass (PB Range=12)
Bass	179	SynPop1C	4 / 4	2	90	Synth Bass
Bass	180	SynPop1E	4 / 4	2	90	:
Bass	181	SynPop1F	4 / 4	2	90	:
Bass	182	RetroPpB	4 / 4	2	126	:
Bass	183	Disco B	4 / 4	2	110	:
Bass	184	Disco C	4 / 4	2	110	:

Категория	№ Арпеджио	Наименование арпеджио	Размер	Длина	Исходный темп	Тип голоса
Bass	185	Disco D	4 / 4	2	110	Synth Bass
Bass	186	Disco E	4 / 4	2	110	:
Bass	187	Disco F	4 / 4	2	110	:
Bass	188	Disco G	4 / 4	1	110	:
Bass	189	Disco H	4 / 4	1	110	:
Bass	190	LatinHsB	4 / 4	4	138	Finger Bass
Bass	191	LatinHsD	4 / 4	4	138	Finger Bass
Bass	192	LatinHsG	4 / 4	4	138	Synth Bass
Bass	193	MontunoB	4 / 4	4	100	Finger Bass
Bass	194	MontnoD1	4 / 4	4	100	:
Bass	195	MontnoD2	4 / 4	4	100	:
Bass	196	MontnoE1	4 / 4	4	100	:
Bass	197	MontnoE2	4 / 4	4	100	:
Bass	198	MontnoE3	4 / 4	4	100	:
Bass	199	MontnoE4	4 / 4	4	100	:
Bass	200	MontunoF	4 / 4	4	100	:
Bass	201	MontnoG1	4 / 4	1	100	:
Bass	202	MontnoG2	4 / 4	1	100	:
Bass	203	Reggae1B	4 / 4	4	102	:
Bass	204	Reggae1C	4 / 4	4	102	:
Bass	205	Reggae1D	4 / 4	4	80	:
Bass	206	Reggae1E	4 / 4	4	90	:
Bass	207	Reggae1A	4 / 4	4	102	:
Bass	208	Reggae1F	4 / 4	4	96	:
Bass	209	Reggae1G	4 / 4	1	96	:
Bass	210	Reggae1H	4 / 4	1	90	:
Bass	211	Reggae2B	4 / 4	2	92	:
Bass	212	Reggae2C	4 / 4	2	92	:
Bass	213	Reggae2D	4 / 4	2	92	:
Bass	214	Reggae2E	4 / 4	2	92	:
Bass	215	Reggae2A	4 / 4	2	92	:
Bass	216	Reggae2G	4 / 4	1	92	:
Bass	217	Reggae2H	4 / 4	1	92	:
Bass	218	TurkishB	4 / 4	2	105	:
Bass	219	TurkishC	4 / 4	2	105	:
Bass	220	TurkishD	9 / 8	2	125	:
Bass	221	TurkishE	9 / 8	2	125	:
Bass	222	TurkishA	4 / 4	2	86	:
Bass	223	TurkishF	4 / 4	2	105	:
Bass	224	TurkishG	4 / 4	2	105	:
BaKM	001	KM FnBa1	4 / 4	4	107	“FunkFinger”
BaKM	002	KM FnBa2	4 / 4	4	107	:
BaKM	003	KM FnBa3	4 / 4	4	107	:
BaKM	004	KM FnBa4	4 / 4	4	107	:
BaKM	005	KM FnBa5	4 / 4	4	107	:
BaKM	006	Funk2 B	4 / 4	2	130	:
BaKM	007	Funk2 C	4 / 4	4	130	:
BaKM	008	Funk2 D	4 / 4	4	130	:
BaKM	009	Funk2 E	4 / 4	4	130	:
BaKM	010	Funk2 F	4 / 4	1	130	:
BaKM	011	Funk3 B	4 / 4	2	132	:
BaKM	012	Funk3 C	4 / 4	2	132	:
BaKM	013	Funk3 D	4 / 4	4	132	:
BaKM	014	Funk3 E	4 / 4	4	132	:
BaKM	015	Funk3 A	4 / 4	1	132	:
BaKM	016	Funk3 H	4 / 4	1	132	:
BaKM	017	CoolFnkB	4 / 4	2	96	:
BaKM	018	CoolFnkC	4 / 4	2	96	:
BaKM	019	CoolFnkD	4 / 4	2	96	:
BaKM	020	CoolFnkE	4 / 4	4	96	:
BaKM	021	CoolFnkA	4 / 4	2	96	:
BaKM	022	CoolFnkF	4 / 4	1	96	:
BaKM	023	CoolFnkG	4 / 4	1	96	:
BaKM	024	CoolFnkH	4 / 4	1	96	:
BaKM	025	Soul B	4 / 4	4	117	:
BaKM	026	Soul C	4 / 4	1	117	:
BaKM	027	Soul D	4 / 4	4	117	:
BaKM	028	Soul E	4 / 4	4	117	:
BaKM	029	FolkRckC	4 / 4	1	118	:
BaKM	030	FolkRckD	4 / 4	1	118	:
BaKM	031	FolkRckE	4 / 4	1	118	:
BaKM	032	FolkRckF	4 / 4	1	118	:
BaKM	033	FolkRckG	4 / 4	1	118	:
BaKM	034	SoftRckB	4 / 4	1	75	:
BaKM	035	SoftRckC	4 / 4	1	75	:
BaKM	036	SoftRckD	4 / 4	1	75	:

Категория	№ Арпеджио	Наименование арпеджио	Размер	Длина	Исходный темп	Тип голоса
BaKM	037	SoftRckE	4 / 4	1	75	“Mega Fingr”
BaKM	038	SoftRckA	4 / 4	1	75	:
BaKM	039	SoftRckG	4 / 4	1	75	:
BaKM	040	SoftRckH	4 / 4	1	75	:
BaKM	041	FngrPckB	4 / 4	1	94	:
BaKM	042	FngrPckC	4 / 4	2	94	:
BaKM	043	FngrPckD	4 / 4	1	94	:
BaKM	044	FngrPckE	4 / 4	1	94	:
BaKM	045	FngrPckF	4 / 4	1	94	:
BaKM	046	FngrPckG	4 / 4	1	94	:
BaKM	047	FngrPckH	4 / 4	1	94	:
BaKM	048	LatinRkB	4 / 4	2	120	:
BaKM	049	LatinRkC	4 / 4	2	120	:
BaKM	050	LatinRkD	4 / 4	2	120	:
BaKM	051	LatinRkE	4 / 4	4	120	:
BaKM	052	LatinRkA	4 / 4	2	120	:
BaKM	053	LatinRkG	4 / 4	1	120	:
BaKM	054	LatinRkH	4 / 4	1	120	:
BaKM	055	Samba B	4 / 4	2	114	:
BaKM	056	Samba D	4 / 4	4	114	:
BaKM	057	Samba E	4 / 4	4	114	:
BaKM	058	Samba A	4 / 4	2	114	:
BaKM	059	SpanishB	4 / 4	1	120	:
BaKM	060	SpanishC	4 / 4	2	120	:
BaKM	061	SpanishD	4 / 4	1	120	:
BaKM	062	SpanishE	4 / 4	1	120	:
BaKM	063	SpanishF	4 / 4	2	120	:
BaKM	064	SpanishG	4 / 4	1	120	:
BaKM	065	KM Slap1	4 / 4	4	120	“Mega Slap”
BaKM	066	KM Slap2	4 / 4	2	120	:
BaKM	067	KM Slap3	4 / 4	1	124	:
BaKM	068	KM Slap4	4 / 4	1	124	:
BaKM	069	KM Slap5	4 / 4	2	124	:
BaKM	070	KM Slap6	4 / 4	1	105	:
BaKM	071	KM Slap7	4 / 4	1	105	:
BaKM	072	KM Slap8	4 / 4	1	105	:
BaKM	073	KM Slap9	4 / 4	2	110	:
BaKM	074	KM Slp10	4 / 4	1	110	:
BaKM	075	KM Slp11	4 / 4	1	90	:
BaKM	076	KM PkBa1	4 / 4	4	120	“Mega Pick”
BaKM	077	KM PkBa2	4 / 4	4	120	:
BaKM	078	KM PkBa3	4 / 4	4	120	:
BaKM	079	KM PkBa4	4 / 4	4	120	:
BaKM	080	KM PkBa5	4 / 4	4	120	:
BaKM	081	AnaPop B	4 / 4	2	93	:
BaKM	082	AnaPop C	4 / 4	2	93	:
BaKM	083	AnaPop D	4 / 4	2	93	:
BaKM	084	AnaPop E	4 / 4	4	93	:
BaKM	085	AnaPop A	4 / 4	2	93	:
BaKM	086	AnaPop F	4 / 4	2	93	:
BaKM	087	AnaPop G	4 / 4	1	93	:
BaKM	088	AnaPop H	4 / 4	1	93	:
BaKM	089	KM FlBa1	4 / 4	4	124	“Mega Frtls”
BaKM	090	KM FlBa2	4 / 4	4	124	:
BaKM	091	KM FlBa3	4 / 4	4	124	:
BaKM	092	KM FlBa4	4 / 4	4	124	:
BaKM	093	KM FlBa5	4 / 4	4	124	:
BaKM	094	Slowfl B	4 / 4	1	74	:
BaKM	095	Slowfl C	4 / 4	1	74	:
BaKM	096	Slowfl D	4 / 4	1	74	:
BaKM	097	Slowfl E	4 / 4	1	74	:
BaKM	098	Slowfl A	4 / 4	2	74	:
BaKM	099	Slowfl F	4 / 4	2	74	:
BaKM	100	Slowfl G	4 / 4	1	74	:
BaKM	101	Slowfl H	4 / 4	1	74	:
BaKM	102	KM AcBa1	4 / 4	4	132	“Mega Acous”
BaKM	103	KM AcBa2	4 / 4	4	132	:
BaKM	104	KM AcBa3	4 / 4	4	132	:
BaKM	105	KM AcBa4	4 / 4	8	132	:
BaKM	106	KM AcBa5	4 / 4	4	132	:
BaKM	107	Salsa B	4 / 4	4	123	:
BaKM	108	Salsa C	4 / 4	4	123	:
BaKM	109	Salsa F	4 / 4	2	123	:
BaKM	110	Salsa G	4 / 4	1	123	:
Strn	001	Strings1	4 / 4	1	101	Strings
Strn	002	Strings2	4 / 4	1	101	:

Категория	№ Арпеджио	Наименование арпеджио	Размер	Длина	Исходный темп	Тип голоса
Strn	003	Strings3	4 / 4	1	101	Strings
Strn	004	Strings4	4 / 4	1	101	:
Strn	005	Strings5	4 / 4	1	101	:
Strn	006	Strings6	4 / 4	1	101	:
Strn	007	Strings7	4 / 4	1	101	:
Strn	008	Strings8	4 / 4	1	101	:
Strn	009	Strings9**	4 / 4	2	120	:
Strn	010	Cello1**	4 / 4	2	120	Cello
Strn	011	Cello2**	4 / 4	2	120	:
Strn	012	StrngUp1**	4 / 4	1	120	Strings
Strn	013	StrngDw1**	4 / 4	1	120	:
Strn	014	StrngUp2	4 / 4	1	120	:
Strn	015	StrngDw2	4 / 4	1	120	:
Strn	016	Orchestr	4 / 4	4	126	:
Strn	017	OrchChrd	4 / 4	4	126	:
Strn	018	Jupiter	4 / 4	4	120	:
Strn	019	NewR&B2B	4 / 4	2	90	:
Strn	020	NewR&B2C	4 / 4	2	90	:
Strn	021	NewR&B2D	4 / 4	2	90	:
Strn	022	NwR&B2E1	4 / 4	2	90	:
Strn	023	NwR&B2E2	4 / 4	2	90	:
Strn	024	NewR&B2F	4 / 4	2	90	:
Strn	025	NewR&B2G	4 / 4	1	90	:
Strn	026	TurkishE	9 / 8	2	125	:
Strn	027	TurkishA	4 / 4	2	86	:
Strn	028	TurkishG	4 / 4	2	105	:
Strn	029	Pizz1	4 / 4	1	120	Pizz Strings
Strn	030	Pizz2	4 / 4	1	120	:
Strn	031	Pizz3	4 / 4	1	120	:
Strn	032	Pizz4	4 / 4	1	124	:
Strn	033	Pizz5	4 / 4	1	124	:
Strn	034	Smooth1D	4 / 4	2	115	:
Strn	035	Smooth1E	4 / 4	2	115	:
Strn	036	FlipHp1D	4 / 4	2	132	:
Strn	037	FlipHp1E	4 / 4	2	132	:
Strn	038	FlipHp1H	4 / 4	1	132	:
Strn	039	HipHop1D	4 / 4	2	105	:
Strn	040	HipHop1E	4 / 4	2	105	:
Strn	041	HipHop1H	4 / 4	1	105	:
Bras	001	BrasSec1	4 / 4	1	120	Brass Section
Bras	002	BrasSec2	4 / 4	1	120	:
Bras	003	BrasSec3	4 / 4	1	120	:
Bras	004	BrasSec4	4 / 4	1	120	:
Bras	005	BrasSec5	4 / 4	1	120	:
Bras	006	BrasSec6	4 / 4	1	120	:
Bras	007	BrasSec7	4 / 4	1	120	:
Bras	008	Funk2 D	4 / 4	4	130	:
Bras	009	Funk2 E1	4 / 4	4	130	:
Bras	010	Funk2 E2	4 / 4	1	130	:
Bras	011	Funk2 A	4 / 4	1	130	:
Bras	012	Funk2 F	4 / 4	1	130	:
Bras	013	Funk3 C	4 / 4	2	132	:
Bras	014	Funk3 D	4 / 4	4	132	:
Bras	015	Funk3 E	4 / 4	2	132	:
Bras	016	Funk3 A	4 / 4	1	132	:
Bras	017	Funk3 G	4 / 4	1	132	:
Bras	018	Funk3 H	4 / 4	1	132	:
Bras	019	Soul G	4 / 4	1	117	:
Bras	020	NewGos F	4 / 4	2	90	:
Bras	021	Samba E1	4 / 4	4	114	:
Bras	022	Samba A1	4 / 4	2	114	:
Bras	023	Samba F1	4 / 4	2	114	:
Bras	024	Samba C2	4 / 4	4	114	:
Bras	025	Samba D2	4 / 4	4	114	:
Bras	026	Salsa C1	4 / 4	1	123	:
Bras	027	Salsa D1	4 / 4	1	123	:
Bras	028	Salsa F1	4 / 4	2	123	:
Bras	029	Salsa B2	4 / 4	1	123	:
Bras	030	Salsa C2	4 / 4	4	120	:
Bras	031	Salsa B3	4 / 4	2	123	:
Bras	032	Salsa C3	4 / 4	2	123	:
Bras	033	Salsa D3	4 / 4	2	123	:
Bras	034	Salsa F3	4 / 4	1	123	:
Bras	035	Salsa G3	4 / 4	1	123	:
Bras	036	TurkishD	9 / 8	2	125	:
RdPp	001	Flute1	4 / 4	1	120	Flute

Категория	№ Арпеджио	Наименование арпеджио	Размер	Длина	Исходный темп	Тип голоса
RdPp	002	Flute2	4 / 4	1	120	Flute
RdPp	003	Flute3	4 / 4	1	120	:
RdPp	004	Flutter1	4 / 4	1	120	Flute/Reed
RdPp	005	Flutter2	4 / 4	1	120	:
RdPp	006	Flutter3	4 / 4	1	120	:
RdPp	007	Soul C	4 / 4	4	117	Saxophone
RdPp	008	Soul D	4 / 4	4	117	:
RdPp	009	Soul F	4 / 4	1	117	:
RdPp	010	Soul H	4 / 4	1	117	:
RdPp	011	HipHop1E	4 / 4	2	105	:
RdPp	012	HipHop1F	4 / 4	2	105	:
RdPp	013	Samba B	4 / 4	2	114	:
RdPp	014	Samba D	4 / 4	4	114	:
RdPp	015	Samba E	4 / 4	4	114	:
RdPp	016	Samba F	4 / 4	2	114	:
RdPp	017	TurkshB1	4 / 4	2	105	Ney
RdPp	018	TurkshG1	4 / 4	2	105	:
RdPp	019	TurkshC2	4 / 4	2	105	Saxophone
RdPp	020	TurkshD2	9 / 8	2	125	:
RdPp	021	TurkshE2	9 / 8	2	125	:
RdPp	022	TurkshF2	4 / 4	2	105	:
Lead	001	Disco C	4 / 4	2	110	Synth Lead
Lead	002	Disco D	4 / 4	1	110	:
Lead	003	Disco E	4 / 4	2	110	:
Lead	004	Disco F	4 / 4	2	110	:
Lead	005	Disco G	4 / 4	1	110	:
Lead	006	Disco H	4 / 4	1	110	:
PdMe	001	Ripples	4 / 4	4	82	Synth Pad
PdMe	002	Cycle1	4 / 4	3	120	:
PdMe	003	Cycle2	4 / 4	6	120	:
PdMe	004	Cycle3	4 / 4	14	118	:
PdMe	005	AnaPop D	4 / 4	1	93	:
PdMe	006	AnaPop E	4 / 4	1	93	:
PdMe	007	Smooth1E	4 / 4	2	115	Synth Voice
PdMe	008	Smooth1F	4 / 4	2	115	:
PdMe	009	HipHop2A	4 / 4	1	94	Hit
PdMe	010	HipHop2F	4 / 4	2	94	:
CPrc	001	Ethnic1	6 / 4	5	118	Chromatic Perc.
CPrc	002	Ethnic2	7 / 4	3	120	:
CPrc	003	MOD1	4 / 4	1	120	:
CPrc	004	MOD2	4 / 4	2	120	:
CPrc	005	MOD3	4 / 4	1	120	:
CPrc	006	Trill 1	4 / 4	1	120	:
CPrc	007	Trill 2	4 / 4	2	120	:
CPrc	008	Trill 3	4 / 4	2	120	:
CPrc	009	Cresendo	4 / 4	1	120	:
CPrc	010	Trance D	4 / 4	4	140	Wood Percussion
CPrc	011	Disco F	4 / 4	2	110	Glockenspiel
CPrc	012	Disco H	4 / 4	1	110	:
DrPc	001	Funk1 B1	4 / 4	4	107	“Hyper Std”
DrPc	002	Funk1 C1	4 / 4	4	107	:
DrPc	003	Funk1 D	4 / 4	4	107	:
DrPc	004	Funk1 E	4 / 4	4	107	:
DrPc	005	Funk1 A	4 / 4	4	107	:
DrPc	006	Funk1 F1	4 / 4	1	107	:
DrPc	007	Funk1 G	4 / 4	1	107	:
DrPc	008	Funk1 H1	4 / 4	1	107	:
DrPc	009	Funk1 B2	4 / 4	2	107	:
DrPc	010	Funk1 C2	4 / 4	4	107	:
DrPc	011	Funk1 F2	4 / 4	1	107	:
DrPc	012	Funk1 H2	4 / 4	1	107	:
DrPc	013	Funk2 B	4 / 4	4	130	“DryStandrd”
DrPc	014	Funk2 C	4 / 4	4	130	:
DrPc	015	Funk2 D	4 / 4	4	130	:
DrPc	016	Funk2 E	4 / 4	4	130	:
DrPc	017	Funk2 A	4 / 4	2	130	:
DrPc	018	Funk2 F	4 / 4	1	130	:
DrPc	019	Funk2 G	4 / 4	1	130	:
DrPc	020	Funk2 H	4 / 4	1	130	:
DrPc	021	Funk3 B	4 / 4	2	132	:
DrPc	022	Funk3 C	4 / 4	2	132	:
DrPc	023	Funk3 D	4 / 4	4	132	:
DrPc	024	Funk3 E	4 / 4	4	132	:
DrPc	025	Funk3 A	4 / 4	1	132	:
DrPc	026	Funk3 F	4 / 4	2	132	:
DrPc	027	Funk3 G	4 / 4	1	132	:

Категория	№ Арпеджио	Наименование арпеджио	Размер	Длина	Исходный темп	Тип голоса
DrPc	028	Funk3 H	4 / 4	1	132	“DryStandrd”
DrPc	029	Funk4 A	4 / 4	2	110	:
DrPc	030	Funk4 B	4 / 4	2	110	:
DrPc	031	Funk4 C	4 / 4	4	110	:
DrPc	032	Funk4 D	4 / 4	4	110	:
DrPc	033	CoolFnkB	4 / 4	2	96	“Hyper Std”
DrPc	034	CoolFnkC	4 / 4	2	96	:
DrPc	035	CoolFnkD	4 / 4	2	96	:
DrPc	036	CoolFnkE	4 / 4	2	96	:
DrPc	037	CoolFnkA	4 / 4	2	96	:
DrPc	038	CoolFnkF	4 / 4	2	96	:
DrPc	039	CoolFnkG	4 / 4	1	96	:
DrPc	040	CoolFnkH	4 / 4	1	96	:
DrPc	041	Soul B	4 / 4	4	117	“DryStandrd”
DrPc	042	Soul C	4 / 4	4	117	:
DrPc	043	Soul D	4 / 4	4	117	:
DrPc	044	Soul E	4 / 4	4	117	:
DrPc	045	Soul A	4 / 4	1	117	:
DrPc	046	Soul F	4 / 4	4	117	:
DrPc	047	Soul G	4 / 4	1	117	:
DrPc	048	Soul H	4 / 4	1	117	:
DrPc	049	NewR&B1B	4 / 4	1	97	“Hip Hop3”
DrPc	050	NewR&B1C	4 / 4	1	97	:
DrPc	051	NewR&B1D	4 / 4	1	97	:
DrPc	052	NewR&B1E	4 / 4	1	97	:
DrPc	053	NewR&B1A	4 / 4	2	97	:
DrPc	054	NewR&B1F	4 / 4	2	97	:
DrPc	055	NewR&B1G	4 / 4	1	97	:
DrPc	056	NewR&B1H	4 / 4	1	97	:
DrPc	057	NewR&B2B	4 / 4	2	90	:
DrPc	058	NewR&B2C	4 / 4	2	90	:
DrPc	059	NewR&B2D	4 / 4	2	90	:
DrPc	060	NewR&B2E	4 / 4	2	90	:
DrPc	061	NewR&B2A	4 / 4	2	90	:
DrPc	062	NewR&B2F	4 / 4	2	90	:
DrPc	063	NewR&B2G	4 / 4	1	90	:
DrPc	064	NewR&B2H	4 / 4	1	90	:
DrPc	065	FlipHp1B	4 / 4	2	132	:
DrPc	066	FlipHp1C	4 / 4	2	132	:
DrPc	067	FlipHp1D	4 / 4	2	132	:
DrPc	068	FlipHp1E	4 / 4	2	132	:
DrPc	069	FlipHp1A	4 / 4	2	132	:
DrPc	070	FlipHp1F	4 / 4	4	132	:
DrPc	071	FlipHp1G	4 / 4	1	132	:
DrPc	072	FlipHp1H	4 / 4	1	132	:
DrPc	073	FlipHp2A	4 / 4	4	125	:
DrPc	074	FlipHp2B	4 / 4	4	125	:
DrPc	075	FlipHp2C	4 / 4	4	125	:
DrPc	076	FlipHp2D	4 / 4	4	125	:
DrPc	077	HipHop1B	4 / 4	2	105	:
DrPc	078	HipHop1C	4 / 4	2	105	:
DrPc	079	HipHop1D	4 / 4	2	105	:
DrPc	080	HipHop1E	4 / 4	2	105	:
DrPc	081	HipHop1A	4 / 4	1	105	:
DrPc	082	HipHop1F	4 / 4	2	105	:
DrPc	083	HipHop1G	4 / 4	1	105	:
DrPc	084	HipHop1H	4 / 4	1	105	:
DrPc	085	HipHop2B	4 / 4	2	104	:
DrPc	086	HipHop2C	4 / 4	2	104	:
DrPc	087	HipHop2D	4 / 4	2	104	:
DrPc	088	HipHop2E	4 / 4	2	104	:
DrPc	089	HipHop2A	4 / 4	1	104	:
DrPc	090	HipHop2F	4 / 4	2	104	:
DrPc	091	HipHop2G	4 / 4	1	104	:
DrPc	092	HipHop2H	4 / 4	1	104	:
DrPc	093	HipHop3B	4 / 4	2	94	“Break Kit”
DrPc	094	HipHop3C	4 / 4	2	94	:
DrPc	095	HipHop3D	4 / 4	2	94	:
DrPc	096	HipHop3E	4 / 4	2	94	:
DrPc	097	HipHop3A	4 / 4	2	94	:
DrPc	098	HipHop3F	4 / 4	2	94	:
DrPc	099	HipHop3G	4 / 4	1	94	:
DrPc	100	HipHop3H	4 / 4	1	94	:
DrPc	101	HipHop4	4 / 4	2	96	“Hip Hop1”
DrPc	102	ClscHipB	4 / 4	2	90	“Hip Hop3”
DrPc	103	ClscHipC	4 / 4	1	90	:

Категория	№ Арпеджио	Наименование арпеджио	Размер	Длина	Исходный темп	Тип голоса
DrPc	104	ClscHipD	4 / 4	1	90	“Hip Hop3”
DrPc	105	ClscHipE	4 / 4	2	90	:
DrPc	106	ClsHipA1	4 / 4	2	90	:
DrPc	107	ClsHipA2	4 / 4	1	90	:
DrPc	108	ClscHipG	4 / 4	1	90	:
DrPc	109	ClscHipH	4 / 4	1	90	:
DrPc	110	ClsHipA3	4 / 4	4	90	:
DrPc	111	GangstaA	4 / 4	2	98	“Hip Hop4”
DrPc	112	GangstaB	4 / 4	4	98	:
DrPc	113	GangstaC	4 / 4	4	98	:
DrPc	114	GangstaD	4 / 4	2	98	:
DrPc	115	i-Hop A	4 / 4	4	98	“T9HipKit1”
DrPc	116	i-Hop B	4 / 4	4	98	:
DrPc	117	i-Hop C	4 / 4	4	98	:
DrPc	118	i-Hop D	4 / 4	1	98	:
DrPc	119	Smooth1B	4 / 4	2	115	“Hip Hop3”
DrPc	120	Smooth1C	4 / 4	2	115	:
DrPc	121	Smooth1D	4 / 4	2	115	:
DrPc	122	Smooth1E	4 / 4	2	115	:
DrPc	123	Smooth1A	4 / 4	2	115	:
DrPc	124	Smooth1F	4 / 4	2	115	:
DrPc	125	Smooth1G	4 / 4	1	115	:
DrPc	126	Smooth1H	4 / 4	1	115	:
DrPc	127	Smooth2A	4 / 4	4	64	“Hip Hop1”
DrPc	128	Smooth2B	4 / 4	4	64	:
DrPc	129	Smooth2C	4 / 4	4	64	:
DrPc	130	Smooth2D	4 / 4	4	64	:
DrPc	131	NewGos B	4 / 4	2	90	“Hip Hop3”
DrPc	132	NewGos C	4 / 4	2	90	:
DrPc	133	NewGos D	4 / 4	2	90	:
DrPc	134	NewGos E	4 / 4	2	90	:
DrPc	135	NewGos A	4 / 4	1	90	:
DrPc	136	NewGos F	4 / 4	2	90	:
DrPc	137	NewGos G	4 / 4	1	90	:
DrPc	138	NewGos H	4 / 4	1	90	:
DrPc	139	Gospel A	3 / 4	4	126	“DryStandrd”
DrPc	140	Gospel B	3 / 4	2	126	:
DrPc	141	6/8R&B B	4 / 4	2	61	“Hip Hop3”
DrPc	142	6/8R&B C	4 / 4	2	61	:
DrPc	143	6/8R&B D	4 / 4	2	61	:
DrPc	144	6/8R&B E	4 / 4	2	61	:
DrPc	145	6/8R&B A	4 / 4	2	61	:
DrPc	146	6/8R&B F	4 / 4	2	61	:
DrPc	147	6/8R&B G	4 / 4	1	61	:
DrPc	148	6/8R&B H	4 / 4	1	61	:
DrPc	149	CmbJazzB	4 / 4	4	204	“DryStandrd”
DrPc	150	CmbJazzC	4 / 4	4	204	:
DrPc	151	CmbJazzD	4 / 4	4	204	:
DrPc	152	CmbJazzE	4 / 4	4	204	:
DrPc	153	CmbJazzA	4 / 4	4	204	:
DrPc	154	CmbJazzF	4 / 4	4	204	:
DrPc	155	CmbJazzG	4 / 4	1	204	:
DrPc	156	CmbJazzH	4 / 4	1	204	:
DrPc	157	Bebop A	4 / 4	4	152	:
DrPc	158	Bebop B	4 / 4	4	152	:
DrPc	159	JazzHop	4 / 4	2	106	“Hip Hop2”
DrPc	160	Abstract	4 / 4	2	86	:
DrPc	161	FolkRckB	4 / 4	1	118	“DryStandrd”
DrPc	162	FolkRkC1	4 / 4	4	118	:
DrPc	163	FolkRckE	4 / 4	1	118	:
DrPc	164	FolkRckA	4 / 4	1	118	:
DrPc	165	FolkRckF	4 / 4	1	118	:
DrPc	166	FolkRckG	4 / 4	1	118	:
DrPc	167	FolkRckH	4 / 4	1	118	:
DrPc	168	FolkRkC2	4 / 4	1	118	:
DrPc	169	SoftRckB	4 / 4	4	75	:
DrPc	170	SoftRckC	4 / 4	4	75	:
DrPc	171	SoftRckD	4 / 4	4	75	:
DrPc	172	SoftRckE	4 / 4	4	75	:
DrPc	173	SoftRckA	4 / 4	1	75	:
DrPc	174	SoftRckF	4 / 4	1	75	:
DrPc	175	SoftRckG	4 / 4	1	75	:
DrPc	176	SoftRckH	4 / 4	1	75	:
DrPc	177	Ballad1A	4 / 4	2	72	“Hyper Std”
DrPc	178	Ballad1B	4 / 4	2	72	:
DrPc	179	Ballad1C	4 / 4	2	72	:

Категория	№ Арпеджио	Наименование арпеджио	Размер	Длина	Исходный темп	Тип голоса
DrPc	180	Ballad1D	4 / 4	1	72	“Hyper Std”
DrPc	181	Ballad2A	4 / 4	2	72	:
DrPc	182	Ballad2B	4 / 4	2	72	:
DrPc	183	Unplug B	4 / 4	4	120	“DryStandrd”
DrPc	184	Unplug C	4 / 4	4	120	:
DrPc	185	Unplug D	4 / 4	4	120	:
DrPc	186	Unplug E	4 / 4	4	120	:
DrPc	187	Unplug A	4 / 4	1	120	:
DrPc	188	Unplug F	4 / 4	1	120	:
DrPc	189	Unplug G	4 / 4	1	120	:
DrPc	190	Unplug H	4 / 4	1	120	:
DrPc	191	FngrPckB	4 / 4	4	94	:
DrPc	192	FngrPckC	4 / 4	4	94	:
DrPc	193	FngrPckD	4 / 4	4	94	:
DrPc	194	FngrPckE	4 / 4	4	94	:
DrPc	195	FngrPkA1	4 / 4	1	94	:
DrPc	196	FngrPkA2	4 / 4	1	94	:
DrPc	197	FngrPckF	4 / 4	1	94	:
DrPc	198	FngrPckG	4 / 4	1	94	:
DrPc	199	FngrPckH	4 / 4	1	94	:
DrPc	200	Slowfl B	4 / 4	1	74	“Hyper Std”
DrPc	201	Slowfl C	4 / 4	1	74	:
DrPc	202	Slowfl D	4 / 4	1	74	:
DrPc	203	Slowfl E	4 / 4	1	74	:
DrPc	204	Slowfl A	4 / 4	2	74	:
DrPc	205	Slowfl F	4 / 4	2	74	:
DrPc	206	Slowfl G	4 / 4	1	74	:
DrPc	207	Slowfl H	4 / 4	1	74	:
DrPc	208	GtrPop B	4 / 4	2	90	“DryStandrd”
DrPc	209	GtrPop C	4 / 4	1	90	:
DrPc	210	GtrPopD1	4 / 4	2	90	:
DrPc	211	GtrPopE1	4 / 4	2	90	:
DrPc	212	GtrPop A	4 / 4	2	90	:
DrPc	213	GtrPopF1	4 / 4	2	90	:
DrPc	214	GtrPopG1	4 / 4	1	90	:
DrPc	215	GtrPop H	4 / 4	1	90	:
DrPc	216	GtrPopD2	4 / 4	2	90	“Latin Perc”
DrPc	217	GtrPopE2	4 / 4	2	90	:
DrPc	218	GtrPopF2	4 / 4	2	90	:
DrPc	219	GtrPopG2	4 / 4	1	90	:
DrPc	220	AnaPop B	4 / 4	2	93	“AnalogT8”
DrPc	221	AnaPop C	4 / 4	2	93	:
DrPc	222	AnaPop D	4 / 4	2	93	:
DrPc	223	AnaPop E	4 / 4	4	93	:
DrPc	224	AnaPop A	4 / 4	2	93	:
DrPc	225	AnaPop F	4 / 4	2	93	:
DrPc	226	AnaPop G	4 / 4	1	93	:
DrPc	227	AnaPop H	4 / 4	1	93	:
DrPc	228	PnoClubB	4 / 4	2	96	“Hyper Std”
DrPc	229	PnoClubC	4 / 4	2	96	:
DrPc	230	PnoClubD	4 / 4	2	96	:
DrPc	231	PnoClubE	4 / 4	2	96	:
DrPc	232	PnClubA1	4 / 4	2	96	:
DrPc	233	PnClubA2	4 / 4	2	96	:
DrPc	234	PnClubF1	4 / 4	2	96	:
DrPc	235	PnClubF2	4 / 4	1	96	:
DrPc	236	PnoClubG	4 / 4	1	96	:
DrPc	237	PnoClubH	4 / 4	1	96	:
DrPc	238	70sRockB	4 / 4	4	130	“DryStandrd”
DrPc	239	70sRockC	4 / 4	4	130	:
DrPc	240	70sRockD	4 / 4	4	130	:
DrPc	241	70sRockE	4 / 4	4	130	:
DrPc	242	70sRockA	4 / 4	1	130	:
DrPc	243	70sRockF	4 / 4	2	130	:
DrPc	244	70sRockG	4 / 4	1	130	:
DrPc	245	70sRockH	4 / 4	1	130	:
DrPc	246	PopRck1A	4 / 4	2	126	“RockSt1”
DrPc	247	PopRck1B	4 / 4	2	126	:
DrPc	248	PopRck1C	4 / 4	2	126	:
DrPc	249	PopRck1D	4 / 4	2	126	:
DrPc	250	PopRck2A	4 / 4	2	120	“RockSt2”
DrPc	251	PopRck2B	4 / 4	2	120	:
DrPc	252	PopRck2C	4 / 4	2	120	:
DrPc	253	PopRck2D	4 / 4	2	120	:
DrPc	254	Rock1	4 / 4	2	120	:
DrPc	255	Rock2	4 / 4	2	115	:

Категория	№ Арпеджио	Наименование арпеджио	Размер	Длина	Исходный темп	Тип голоса
DrPc	256	Rock3	4 / 4	4	120	“RockSt2”
DrPc	257	MondoRkA	4 / 4	2	94	:
DrPc	258	MondoRkB	4 / 4	2	94	:
DrPc	259	MondoRkC	4 / 4	2	94	:
DrPc	260	MondoRkD	4 / 4	4	94	:
DrPc	261	XovrRckB	4 / 4	2	100	“RockSt1”
DrPc	262	XovrRckC	4 / 4	1	100	:
DrPc	263	XovrRckD	4 / 4	2	100	:
DrPc	264	XovrRckE	4 / 4	2	100	:
DrPc	265	XovrRckA	4 / 4	2	100	:
DrPc	266	XovrRkF1	4 / 4	2	100	:
DrPc	267	XovrRkG1	4 / 4	1	100	:
DrPc	268	XovrRckH	4 / 4	1	100	:
DrPc	269	XovrRkF2	4 / 4	1	100	“Scratches”
DrPc	270	XovrRkG2	4 / 4	1	100	:
DrPc	271	LoBeat1	4 / 4	2	140	“Break Kit”
DrPc	272	LoBeat2	4 / 4	2	130	:
DrPc	273	LoBeat3	4 / 4	1	122	:
DrPc	274	LoBeat4	4 / 4	1	115	:
DrPc	275	Electrn1	4 / 4	1	118	“Tekno Kit”
DrPc	276	Electrn2	4 / 4	1	118	“AnalogT9”
DrPc	277	BgBeat1A	4 / 4	2	120	“Big Kit”
DrPc	278	BgBeat1B	4 / 4	1	120	:
DrPc	279	BigBeat2	4 / 4	1	138	:
DrPc	280	BigBeat3	4 / 4	1	128	:
DrPc	281	DrumnBa1	4 / 4	1	170	“Jungle Kit”
DrPc	282	DrumnBa2	4 / 4	2	165	:
DrPc	283	DrumBa3A	4 / 4	2	154	“Drum'nBass”
DrPc	284	DrumBa3B	4 / 4	2	154	:
DrPc	285	DrumBa3C	4 / 4	2	154	:
DrPc	286	DrumBa3D	4 / 4	1	154	:
DrPc	287	DrumBa3E	4 / 4	2	154	:
DrPc	288	EuroTekA	4 / 4	2	140	“Tekno Kit”
DrPc	289	EuroTekB	4 / 4	2	140	:
DrPc	290	EuroTekC	4 / 4	2	140	:
DrPc	291	EuroTekD	4 / 4	2	140	:
DrPc	292	EuroTekE	4 / 4	2	140	:
DrPc	293	Trance B	4 / 4	4	140	“AnalogT9”
DrPc	294	Trance C	4 / 4	4	140	:
DrPc	295	Trance D	4 / 4	4	140	:
DrPc	296	Trance E	4 / 4	4	140	:
DrPc	297	Trance A	4 / 4	4	140	:
DrPc	298	Trance F	4 / 4	4	140	:
DrPc	299	Trance G	4 / 4	4	140	:
DrPc	300	Trance H	4 / 4	4	140	:
DrPc	301	TrancBd1	4 / 4	4	140	:
DrPc	302	TrancBd2	4 / 4	4	140	:
DrPc	303	TrancBd3	4 / 4	4	140	:
DrPc	304	TrancBd4	4 / 4	4	140	:
DrPc	305	TrancSdf	4 / 4	4	140	:
DrPc	306	TrancClp	4 / 4	4	140	:
DrPc	307	TrancHh1	4 / 4	4	140	:
DrPc	308	TrancHh2	4 / 4	2	140	:
DrPc	309	TrancHh3	4 / 4	1	140	:
DrPc	310	TrancHh4	4 / 4	1	140	:
DrPc	311	TrancHh5	4 / 4	1	140	:
DrPc	312	TrancHh6	4 / 4	1	140	:
DrPc	313	TrancHh7	4 / 4	1	140	:
DrPc	314	Dream B	4 / 4	4	136	“T9HipKit1”
DrPc	315	Dream D	4 / 4	4	136	:
DrPc	316	Dream E	4 / 4	4	136	:
DrPc	317	Dream A	4 / 4	4	136	:
DrPc	318	DreamBd1	4 / 4	4	136	:
DrPc	319	DreamBd2	4 / 4	1	136	:
DrPc	320	DreamBd3	4 / 4	4	136	:
DrPc	321	DreamBd4	4 / 4	4	136	:
DrPc	322	DreamBd5	4 / 4	4	136	:
DrPc	323	DreamSdf	4 / 4	4	136	:
DrPc	324	DreamHh1	4 / 4	1	136	:
DrPc	325	DreamHh2	4 / 4	4	136	:
DrPc	326	DreamHh3	4 / 4	2	136	:
DrPc	327	DreamHh4	4 / 4	4	136	“AnalogT8”
DrPc	328	DreamClp	4 / 4	4	136	“T9HipKit1”
DrPc	329	DreamPc1	4 / 4	4	136	“Percussion”
DrPc	330	DreamPc2	4 / 4	2	136	“AnalogT8”
DrPc	331	DreamPc3	4 / 4	4	136	:

Категория	№ Арпеджио	Наименование арпеджио	Размер	Длина	Исходный темп	Тип голоса
DrPc	332	House1	4 / 4	2	123	“AnalogT9”
DrPc	333	House2	4 / 4	1	123	“Garage”
DrPc	334	House3	4 / 4	2	127	:
DrPc	335	House4A	4 / 4	2	130	“T9HipKit1”
DrPc	336	House4B	4 / 4	2	130	:
DrPc	337	House4C	4 / 4	2	130	:
DrPc	338	House5A	4 / 4	4	120	“House Kit1”
DrPc	339	House5B	4 / 4	1	120	:
DrPc	340	House5C	4 / 4	1	120	:
DrPc	341	House5D	4 / 4	1	120	:
DrPc	342	House6A	4 / 4	1	120	:
DrPc	343	House6B	4 / 4	1	120	:
DrPc	344	House6C	4 / 4	1	120	:
DrPc	345	House7A	4 / 4	1	120	:
DrPc	346	House7B	4 / 4	1	120	:
DrPc	347	House8	4 / 4	2	120	:
DrPc	348	House9	4 / 4	4	120	:
DrPc	349	House10A	4 / 4	1	120	:
DrPc	350	House10B	4 / 4	1	120	:
DrPc	351	House11A	4 / 4	1	120	:
DrPc	352	House11B	4 / 4	1	120	:
DrPc	353	House11C	4 / 4	1	120	:
DrPc	354	House12	4 / 4	2	120	:
DrPc	355	House13	4 / 4	2	120	:
DrPc	356	UKGargeA	4 / 4	4	130	:
DrPc	357	UKGargeB	4 / 4	4	130	:
DrPc	358	UKGargeC	4 / 4	4	130	:
DrPc	359	2 Step	4 / 4	2	120	:
DrPc	360	Ibiza B1	4 / 4	2	135	:
DrPc	361	Ibiza C	4 / 4	2	135	:
DrPc	362	Ibiza D	4 / 4	2	135	:
DrPc	363	Ibiza E	4 / 4	2	135	:
DrPc	364	Ibiza A	4 / 4	8	135	:
DrPc	365	Ibiza F	4 / 4	2	135	:
DrPc	366	Ibiza G	4 / 4	1	135	:
DrPc	367	Ibiza H1	4 / 4	1	135	:
DrPc	368	Ibiza B2	4 / 4	2	135	“DryStandrd”
DrPc	369	Ibiza H2	4 / 4	1	135	“DryStandrd” (PB Range=24)
DrPc	370	ClubHs B	4 / 4	1	128	“House Kit1”
DrPc	371	ClubHs C	4 / 4	1	128	:
DrPc	372	ClubHs D	4 / 4	1	128	:
DrPc	373	ClubHsE1	4 / 4	1	128	:
DrPc	374	ClubHsA1	4 / 4	2	128	:
DrPc	375	ClubHsA2	4 / 4	1	128	:
DrPc	376	ClubHs F	4 / 4	2	128	:
DrPc	377	ClubHs G	4 / 4	1	128	:
DrPc	378	ClubHsH1	4 / 4	1	128	:
DrPc	379	ClubHsE2	4 / 4	1	128	“Hyper Std”
DrPc	380	ClubHsH2	4 / 4	1	128	:
DrPc	381	Garage1	4 / 4	2	130	“Garage”
DrPc	382	Garage2B	4 / 4	2	127	“House Kit1”
DrPc	383	Garage2C	4 / 4	2	127	:
DrPc	384	Garage2D	4 / 4	2	127	:
DrPc	385	Garage2E	4 / 4	2	127	:
DrPc	386	Garge2A1	4 / 4	1	127	:
DrPc	387	Garge2A2	4 / 4	1	127	:
DrPc	388	Garage2F	4 / 4	2	127	:
DrPc	389	Garage2G	4 / 4	1	127	:
DrPc	390	ChlOutB1	4 / 4	2	79	“DryStandrd”
DrPc	391	ChlOutC1	4 / 4	2	79	:
DrPc	392	ChlOutD1	4 / 4	4	79	:
DrPc	393	ChlOutE1	4 / 4	2	79	:
DrPc	394	ChlOutA1	4 / 4	1	79	:
DrPc	395	ChlOutF1	4 / 4	4	79	:
DrPc	396	ChlOutG1	4 / 4	1	79	:
DrPc	397	ChlOutH1	4 / 4	1	79	:
DrPc	398	ChlOutB2	4 / 4	2	79	“Break Kit”
DrPc	399	ChlOutC2	4 / 4	2	79	:
DrPc	400	ChlOutD2	4 / 4	4	79	:
DrPc	401	ChlOutE2	4 / 4	2	79	:
DrPc	402	ChlOutA2	4 / 4	4	79	:
DrPc	403	ChlOutF2	4 / 4	4	79	:
DrPc	404	ChlOutG2	4 / 4	1	79	:
DrPc	405	ChlOutH2	4 / 4	1	79	:
DrPc	406	SynPop1B	4 / 4	4	90	“T9HipKit1”
DrPc	407	SynPop1C	4 / 4	4	90	:

Категория	№ Арпеджио	Наименование арпеджио	Размер	Длина	Исходный темп	Тип голоса
DrPc	408	SynPp1D1	4 / 4	4	90	“T9HipKit1”
DrPc	409	SynPp1E1	4 / 4	4	90	:
DrPc	410	SynPp1F1	4 / 4	4	90	:
DrPc	411	SynPp1D2	4 / 4	2	90	:
DrPc	412	SynPp1E2	4 / 4	2	90	:
DrPc	413	SynPp1F2	4 / 4	4	90	:
DrPc	414	SyPp1Clp	4 / 4	2	90	:
DrPc	415	SynPp1Hh	4 / 4	2	90	:
DrPc	416	SynPop2A	4 / 4	2	90	“SynPopKit”
DrPc	417	SynPop2B	4 / 4	2	90	:
DrPc	418	SynPop2C	4 / 4	2	90	:
DrPc	419	SynPop2D	4 / 4	2	90	:
DrPc	420	SynPop2E	4 / 4	2	90	:
DrPc	421	RetroPpB	4 / 4	1	126	“House Kit1”
DrPc	422	RetroPpD	4 / 4	2	126	:
DrPc	423	RetroPpF	4 / 4	1	126	:
DrPc	424	Disco B	4 / 4	2	110	“DryStandrd”
DrPc	425	Disco C	4 / 4	2	110	:
DrPc	426	Disco D	4 / 4	2	110	:
DrPc	427	Disco E	4 / 4	2	110	:
DrPc	428	Disco A	4 / 4	1	110	:
DrPc	429	Disco F	4 / 4	2	110	:
DrPc	430	Disco G	4 / 4	1	110	:
DrPc	431	Disco H	4 / 4	1	110	:
DrPc	432	LatinHsB	4 / 4	4	138	“House Kit1”
DrPc	433	LatinHsF	4 / 4	4	138	:
DrPc	434	LatinHsH	4 / 4	4	138	:
DrPc	435	LatinRkB	4 / 4	2	120	“DryStandrd”
DrPc	436	LatinRkC	4 / 4	2	120	:
DrPc	437	LatinRkD	4 / 4	2	120	:
DrPc	438	LatinRkE	4 / 4	4	120	:
DrPc	439	LatinRkA	4 / 4	2	120	:
DrPc	440	LatinRkF	4 / 4	1	120	:
DrPc	441	LatinRkG	4 / 4	1	120	:
DrPc	442	LatinRkH	4 / 4	1	120	:
DrPc	443	Samba B	4 / 4	4	114	:
DrPc	444	Samba C	4 / 4	4	114	:
DrPc	445	Samba D	4 / 4	4	114	:
DrPc	446	Samba E	4 / 4	4	114	:
DrPc	447	Samba A	4 / 4	2	114	:
DrPc	448	Samba F	4 / 4	2	114	:
DrPc	449	Samba G	4 / 4	1	114	:
DrPc	450	Samba H	4 / 4	1	114	:
DrPc	451	Salsa B1	4 / 4	2	123	:
DrPc	452	Salsa C1	4 / 4	2	123	:
DrPc	453	Salsa D1	4 / 4	2	123	:
DrPc	454	Salsa E1	4 / 4	4	123	:
DrPc	455	Salsa A1	4 / 4	2	123	:
DrPc	456	Salsa A3	4 / 4	2	123	:
DrPc	457	Salsa F1	4 / 4	2	123	:
DrPc	458	Salsa G1	4 / 4	1	123	:
DrPc	459	Salsa H1	4 / 4	1	123	:
DrPc	460	Salsa B2	4 / 4	4	123	“Cuban”
DrPc	461	Salsa C2	4 / 4	4	123	:
DrPc	462	Salsa D2	4 / 4	4	123	:
DrPc	463	Salsa E2	4 / 4	4	123	:
DrPc	464	Salsa A2	4 / 4	4	123	:
DrPc	465	Salsa F2	4 / 4	2	123	:
DrPc	466	Salsa G2	4 / 4	1	123	:
DrPc	467	Salsa H2	4 / 4	1	123	:
DrPc	468	MontnoB1	4 / 4	2	100	“DryStandrd”
DrPc	469	MontnoC1	4 / 4	2	100	:
DrPc	470	MontnoD1	4 / 4	2	100	:
DrPc	471	MontnoE1	4 / 4	2	100	:
DrPc	472	MontnoA1	4 / 4	2	100	:
DrPc	473	MontnoF1	4 / 4	2	100	:
DrPc	474	MontnoG1	4 / 4	1	100	:
DrPc	475	MontnoH1	4 / 4	1	100	:
DrPc	476	MontnoB2	4 / 4	4	100	“Latin Perc”
DrPc	477	MontnoC2	4 / 4	4	100	:
DrPc	478	MontnoD2	4 / 4	4	100	:
DrPc	479	MontnoE2	4 / 4	4	100	:
DrPc	480	MontnoA2	4 / 4	4	100	:
DrPc	481	MontnoF2	4 / 4	4	100	:
DrPc	482	MontnoG2	4 / 4	1	100	:
DrPc	483	MontnoH2	4 / 4	1	100	:

Категория	№ Арпеджио	Наименование арпеджио	Размер	Длина	Исходный темп	Тип голоса
DrPc	484	Latin A	4 / 4	4	120	“Latin Perc”
DrPc	485	Latin B	4 / 4	4	120	:
DrPc	486	Latin C	4 / 4	4	120	:
DrPc	487	Latin D	4 / 4	4	120	:
DrPc	488	Latin E	4 / 4	4	120	:
DrPc	489	Regge1B1	4 / 4	4	102	“DryStandrd”
DrPc	490	Regge1C1	4 / 4	4	102	:
DrPc	491	Regge1D1	4 / 4	4	80	:
DrPc	492	Regge1E1	4 / 4	4	90	:
DrPc	493	Regge1A1	4 / 4	4	102	:
DrPc	494	Regge1F1	4 / 4	4	96	:
DrPc	495	Reggae1G	4 / 4	1	96	:
DrPc	496	Reggae1H	4 / 4	1	102	:
DrPc	497	Regge1B2	4 / 4	4	102	“Percussion”
DrPc	498	Regge1C2	4 / 4	4	102	:
DrPc	499	Regge1D2	4 / 4	4	80	:
DrPc	500	Regge1E2	4 / 4	4	90	:
DrPc	501	Regge1A2	4 / 4	4	102	:
DrPc	502	Regge1F2	4 / 4	4	96	:
DrPc	503	Reggae2B	4 / 4	2	92	“DryStandrd”
DrPc	504	Reggae2C	4 / 4	2	92	:
DrPc	505	Reggae2D	4 / 4	2	92	:
DrPc	506	Reggae2E	4 / 4	2	92	:
DrPc	507	Regge2A1	4 / 4	1	92	:
DrPc	508	Regge2A2	4 / 4	1	92	:
DrPc	509	Reggae2F	4 / 4	1	92	:
DrPc	510	Reggae2G	4 / 4	1	92	:
DrPc	511	Reggae2H	4 / 4	1	92	:
DrPc	512	SpanishB	4 / 4	2	120	“Hyper Std”
DrPc	513	SpanishC	4 / 4	2	120	:
DrPc	514	SpanishD	4 / 4	2	120	:
DrPc	515	SpanishE	4 / 4	2	120	:
DrPc	516	SpanshA1	4 / 4	1	120	:
DrPc	517	SpanshA2	4 / 4	1	120	:
DrPc	518	SpanishF	4 / 4	1	120	:
DrPc	519	SpanishG	4 / 4	1	120	:
DrPc	520	SpanishH	4 / 4	1	120	:
DrPc	521	TurkshB1	4 / 4	2	105	“Arabic Mix“
DrPc	522	TurkshC1	4 / 4	2	105	:
DrPc	523	TurkshD1	9 / 8	2	125	:
DrPc	524	TurkshE1	9 / 8	2	125	:
DrPc	525	TurkshA1	4 / 4	1	86	:
DrPc	526	TurkshA3	4 / 4	1	86	:
DrPc	527	TurkshF1	4 / 4	2	105	:
DrPc	528	TurkshG1	4 / 4	2	105	:
DrPc	529	TurkshH1	4 / 4	1	120	:
DrPc	530	TurkshB2	4 / 4	2	105	:
DrPc	531	TurkshC2	4 / 4	2	105	:
DrPc	532	TurkshD2	9 / 8	2	125	:
DrPc	533	TurkshE2	9 / 8	2	125	:
DrPc	534	TurkshA2	4 / 4	1	86	:
DrPc	535	TurkshA4	4 / 4	1	86	:
DrPc	536	TurkshF2	4 / 4	2	105	:
DrPc	537	TurkshG2	4 / 4	2	105	:
DrPc	538	TurkshH2	4 / 4	1	120	:
DrPc	539	Roll 1	4 / 4	1	120	GM map kit
DrPc	540	Roll 2	4 / 4	1	120	:
DrPc	541	Roll 3	4 / 4	1	120	
DrPc	542	Roll 4	4 / 4	1	120	
DrPc	543	BigBeat4	4 / 4	4	136	“Big Kit”
DrPc	544	BigBeat5	4 / 4	1	135	:
DrPc	545	BigBeat6	4 / 4	1	132	:
DrPc	546	BigBeat7	4 / 4	2	124	:
DrPc	547	BigBeat8	4 / 4	1	120	:
DrPc	548	BrkTrnce	4 / 4	1	130	“Tekno Kit”
DrPc	549	House14	4 / 4	1	123	“House Kit1”
DrPc	550	House15	4 / 4	2	128	:
DrPc	551	LoBeat5	4 / 4	4	180	“Break Kit”
DrPc	552	LoBeat6	4 / 4	1	87	:
DrPc	553	Linear	4 / 4	1	120	
DrPc	554	08beat1	4 / 4	1	135	Sliced Dr Loop
DrPc	555	08beat2	4 / 4	1	135	:
DrPc	556	08beat3	4 / 4	1	135	:
DrPc	557	16beat1	4 / 4	1	135	:
DrPc	558	16beat2	4 / 4	1	135	:
DrPc	559	1Bar	4 / 4	1	135	:

Категория	№ Арпеджио	Наименование арпеджио	Размер	Длина	Исходный темп	Тип голоса
DrPc	560	1BarRndm	4 / 4	1	135	Sliced Dr Loop
Comb	001	Trancy1	4 / 4	1	140	Performance
Comb	002	Trancy2	4 / 4	4	140	:
Comb	003	Trancy3	4 / 4	16	140	:
Comb	004	SynPopA	4 / 4	4	90	:
Comb	005	SynPopB	4 / 4	4	90	:
Cntr	001	GateCut1	4 / 4	4	120	(CC#10,71,74)
Cntr	002	GateCut2	4 / 4	1	120	(CC#74)
Cntr	003	GateCut3	4 / 4	8	120	(CC#71,74)
Cntr	004	ModCtrl	4 / 4	4	64	(CC#1)
Cntr	005	ModCtrlU	4 / 4	4	90	:
Cntr	006	ArmDown	4 / 4	4	120	(PB, PB Range=12)
Cntr	007	BendVib	4 / 4	4	120	:
Cntr	008	BotDwVib	4 / 4	4	120	:
Cntr	009	BotUpVib	4 / 4	4	120	:
Cntr	010	CHVib	4 / 4	4	120	:
Cntr	011	HamVib	4 / 4	4	120	:
Cntr	012	PullVibA	4 / 4	4	120	:
Cntr	013	PullVibB	4 / 4	4	120	:
Cntr	014	SlideVib	4 / 4	4	120	:
Cntr	015	Trill 4	4 / 4	4	120	:
Cntr	016	Trill 5	4 / 4	4	120	:
Cntr	017	UDCHVib	4 / 4	4	120	:
Cntr	018	Vibra1	4 / 4	4	120	:
Cntr	019	Vibra2	4 / 4	4	120	:
Cntr	020	HipHop2C	4 / 4	2	94	(CC#10)
Cntr	021	HipHop2D	4 / 4	2	94	(CC#71,74)
Cntr	022	HipHop2H	4 / 4	1	94	(CC#71,74)
Cntr	023	ClubHs A	4 / 4	2	128	(CC#10)
Cntr	024	Garage2C	4 / 4	2	127	(CC#74)
Cntr	025	Garage2D	4 / 4	2	127	:
Cntr	026	Garage2G	4 / 4	1	127	:
Cntr	027	NewGos A	4 / 4	1	90	(CC#10,11)
Cntr	028	NewGos C	4 / 4	2	90	:
Cntr	029	NewGos D	4 / 4	2	90	:
Cntr	030	Trance A	4 / 4	4	140	(CC#74)
Cntr	031	Dream A	4 / 4	4	136	:
Cntr	032	ClubHs D	4 / 4	2	128	(CC#71,74)
Cntr	033	ClubHs G	4 / 4	1	128	(CC#71)
Cntr	034	ChllOutB	4 / 4	2	79	(CC#74)
Cntr	035	ChllOutE	4 / 4	2	79	(CC#11,74)
Cntr	036	ChllOutA	4 / 4	4	79	(CC#74)
Cntr	037	ChllOutH	4 / 4	1	79	:

* Настройки Note Limit, наиболее подходящие для каждого из Элементов голоса: 1-70, 71-90, 91-110, 111-127,
** Содержимое предоставлено Keyfax Now Media (www.keyfax.com).

Перечень фраз предварительной настройки

Категория	№ фразы	Наименование фразы	Исходный темп
Dr1	001	Funk1 B1	107
Dr1	002	Funk1 C1	107
Dr1	003	Funk1 D1	107
Dr1	004	Funk1 E1	107
Dr1	005	Funk1 A1	107
Dr1	006	Funk1 F1	107
Dr1	007	Funk1 G1	107
Dr1	008	Funk1 H1	107
Dr1	009	Funk1 B2	107
Dr1	010	Funk1 C2	107
Dr1	011	Funk1 D2	107
Dr1	012	Funk1 E2	107
Dr1	013	Funk2 B1	130
Dr1	014	Funk2 C1	130
Dr1	015	Funk2 D1	130
Dr1	016	Funk2 E1	130
Dr1	017	Funk2 A1	130
Dr1	018	Funk2 F1	130
Dr1	019	Funk2 G1	130
Dr1	020	Funk2 H1	130
Dr1	021	Funk2 B2	130
Dr1	022	Funk2 C2	130
Dr1	023	Funk2 D2	130
Dr1	024	Funk2 A2	130
Dr1	025	Funk2 F2	130
Dr1	026	Funk2 G2	130
Dr1	027	Funk3 A	112
Dr1	028	Funk3 B	112
Dr1	029	Funk3 C	112
Dr1	030	Funk3 D	112
Dr1	031	Funk3 E	112
Dr1	032	Funk3 F	112
Dr1	033	Funk3 G	112
Dr1	034	Funk3 H	112
Dr1	035	CoolFnB1	96
Dr1	036	CoolFnC1	96
Dr1	037	CoolFnD1	96
Dr1	038	CoolFnE1	96
Dr1	039	CoolFnA1	96
Dr1	040	CoolFnF1	96
Dr1	041	CoolFnG1	96
Dr1	042	CoolFnH1	96
Dr1	043	CoolFnB2	96
Dr1	044	CoolFnC2	96
Dr1	045	CoolFnD2	96
Dr1	046	CoolFnE2	96
Dr1	047	CoolFnA2	96
Dr1	048	CoolFnF2	96
Dr1	049	CoolFnG2	96
Dr1	050	CoolFnH2	96
Dr1	051	Soul B1	117
Dr1	052	Soul C1	117
Dr1	053	Soul D1	117
Dr1	054	Soul E1	117
Dr1	055	Soul A1	117
Dr1	056	Soul F1	117
Dr1	057	Soul G1	117
Dr1	058	Soul H1	117
Dr1	059	Soul B2	117
Dr1	060	Soul C2	117
Dr1	061	Soul D2	117
Dr1	062	Soul E2	117
Dr1	063	Soul A2	117
Dr1	064	NewR&B1B	97
Dr1	065	NewR&B1C	97
Dr1	066	NewR&B1D	97
Dr1	067	NewR&B1E	97
Dr1	068	NewR&B1A	97
Dr1	069	NewR&B1F	97
Dr1	070	NewR&B1G	97
Dr1	071	NewR&B1H	97
Dr1	072	NwR&B2B1	90

Категория	№ фразы	Наименование фразы	Исходный темп
Dr1	073	NwR&B2C1	90
Dr1	074	NwR&B2D1	90
Dr1	075	NwR&B2E1	90
Dr1	076	NwR&B2A1	90
Dr1	077	NwR&B2F1	90
Dr1	078	NwR&B2G1	90
Dr1	079	NwR&B2H1	90
Dr1	080	NwR&B2B2	90
Dr1	081	NwR&B2C2	90
Dr1	082	NwR&B2D2	90
Dr1	083	NwR&B2E2	90
Dr1	084	NwR&B2A2	90
Dr1	085	NwR&B2G2	90
Dr1	086	NwR&B2H2	90
Dr1	087	FlpHp1B1	132
Dr1	088	FlpHp1C1	132
Dr1	089	FlpHp1D1	132
Dr1	090	FlpHp1E1	132
Dr1	091	FlpHp1A1	132
Dr1	092	FlpHp1F1	132
Dr1	093	FlpHp1G1	132
Dr1	094	FlpHp1H1	132
Dr1	095	FlpHp1B2	132
Dr1	096	FlpHp1C2	132
Dr1	097	FlpHp1D2	132
Dr1	098	FlpHp1E2	132
Dr1	099	FlpHp1A2	132
Dr1	100	FlpHp1F2	132
Dr1	101	FlpHp1G2	132
Dr1	102	FlpHp1H2	132
Dr1	103	FlpHp1D3	132
Dr1	104	FlpHp1E3	132
Dr1	105	FlpHp1F3	132
Dr1	106	FlipHp2A	125
Dr1	107	FlipHp2B	125
Dr1	108	FlipHp2C	125
Dr1	109	FlipHp2D	125
Dr1	110	FlipHp2E	125
Dr1	111	FlipHp2F	125
Dr1	112	FlipHp2G	125
Dr1	113	FlipHp2H	125
Dr1	114	HipHp1B1	105
Dr1	115	HipHp1C1	105
Dr1	116	HipHp1D1	105
Dr1	117	HipHp1E1	105
Dr1	118	HipHp1A1	105
Dr1	119	HipHp1F1	105
Dr1	120	HipHp1G1	105
Dr1	121	HipHp1H1	105
Dr1	122	HipHp1C2	105
Dr1	123	HipHp1D2	105
Dr1	124	HipHp1E2	105
Dr1	125	HipHp1F2	105
Dr1	126	HipHp1H2	105
Dr1	127	HipHp2B1	94
Dr1	128	HipHp2C1	94
Dr1	129	HipHp2D1	94
Dr1	130	HipHp2E1	94
Dr1	131	HipHp2A1	94
Dr1	132	HipHp2F1	94
Dr1	133	HipHp2G1	94
Dr1	134	HipHp2H1	94
Dr1	135	HipHp2B2	94
Dr1	136	HipHp2C2	94
Dr1	137	HipHp2D2	94
Dr1	138	HipHp2E2	94
Dr1	139	HipHp2A2	94
Dr1	140	HipHp2F2	94
Dr1	141	HipHp2G2	94
Dr1	142	HipHp2H2	94
Dr1	143	ClsHipB1	90
Dr1	144	ClsHipC1	90

Категория	№ фразы	Наименование фразы	Исходный темп
Dr1	145	ClsHipD1	90
Dr1	146	ClsHipE1	90
Dr1	147	ClsHipA1	90
Dr1	148	ClsHipG1	90
Dr1	149	ClsHipH1	90
Dr1	150	ClsHipB2	90
Dr1	151	ClsHipC2	90
Dr1	152	ClsHipD2	90
Dr1	153	ClsHipE2	90
Dr1	154	ClsHipA2	90
Dr1	155	ClsHipH2	90
Dr1	156	GangstaA	98
Dr1	157	GangstaB	98
Dr1	158	GangstaC	98
Dr1	159	GangstaD	98
Dr1	160	GangstaE	98
Dr1	161	GangstaF	98
Dr1	162	GangstaG	98
Dr1	163	GangstaH	98
Dr1	164	i-Hop A	98
Dr1	165	i-Hop B	98
Dr1	166	i-Hop C	98
Dr1	167	i-Hop D	98
Dr1	168	i-Hop E	98
Dr1	169	i-Hop F	98
Dr1	170	i-Hop G	98
Dr1	171	i-Hop H	98
Dr1	172	Smooth1B	115
Dr1	173	Smooth1C	115
Dr1	174	Smooth1D	115
Dr1	175	Smooth1E	115
Dr1	176	Smooth1A	115
Dr1	177	Smooth1F	115
Dr1	178	Smooth1G	115
Dr1	179	Smooth1H	115
Dr1	180	Smooth2A	64
Dr1	181	Smooth2B	64
Dr1	182	Smooth2C	64
Dr1	183	Smooth2D	64
Dr1	184	Smooth2E	64
Dr1	185	Smooth2F	64
Dr1	186	Smooth2G	64
Dr1	187	Smooth2H	64
Dr1	188	NewGos B	90
Dr1	189	NewGos C	90
Dr1	190	NewGos D	90
Dr1	191	NewGos E	90
Dr1	192	NewGos A	90
Dr1	193	NewGos F	90
Dr1	194	NewGos G	90
Dr1	195	NewGos H	90
Dr1	196	Gospel A	90
Dr1	197	Gospel B	90
Dr1	198	Gospel C	90
Dr1	199	Gospel D	90
Dr1	200	Gospel E	90
Dr1	201	Gospel F	90
Dr1	202	Gospel G	90
Dr1	203	Gospel H	90
Dr1	204	6/8R&B B	61
Dr1	205	6/8R&B C	61
Dr1	206	6/8R&B D	61
Dr1	207	6/8R&B E	61
Dr1	208	6/8R&B A	61
Dr1	209	6/8R&B F	61
Dr1	210	6/8R&B G	61
Dr1	211	6/8R&B H	61
Dr1	212	CmbJazzB	204
Dr1	213	CmbJazzC	204
Dr1	214	CmbJazzD	204
Dr1	215	CmbJazzE	204
Dr1	216	CmbJazzA	204

Категория	№ фразы	Наименование фразы	Исходный темп
Dr1	217	CmbJazzF	204
Dr1	218	CmbJazzG	204
Dr1	219	CmbJazzH	204
Dr1	220	Bebop A	152
Dr1	221	Bebop B	152
Dr1	222	Bebop C	152
Dr1	223	Bebop D	152
Dr1	224	Bebop E	152
Dr1	225	Bebop F	152
Dr1	226	Bebop G	152
Dr1	227	Bebop H	152
Dr2	001	FolkRkB1	118
Dr2	002	FolkRkC1	118
Dr2	003	FolkRkD1	118
Dr2	004	FolkRkE1	118
Dr2	005	FolkRkA1	118
Dr2	006	FolkRkF1	118
Dr2	007	FolkRkG1	118
Dr2	008	FolkRkH1	118
Dr2	009	FolkRkC2	118
Dr2	010	FolkRkE2	118
Dr2	011	FolkRkH2	118
Dr2	012	SoftRckB	75
Dr2	013	SoftRckC	75
Dr2	014	SoftRckD	75
Dr2	015	SoftRckE	75
Dr2	016	SoftRckA	75
Dr2	017	SoftRckF	75
Dr2	018	SoftRckG	75
Dr2	019	SoftRckH	75
Dr2	020	Ballad1A	72
Dr2	021	Ballad1B	72
Dr2	022	Ballad1C	72
Dr2	023	Ballad1D	72
Dr2	024	Ballad1E	72
Dr2	025	Ballad1F	72
Dr2	026	Ballad1G	72
Dr2	027	Ballad1H	72
Dr2	028	Ballad2A	72
Dr2	029	Ballad2B	72
Dr2	030	Ballad2C	72
Dr2	031	Ballad2D	72
Dr2	032	Ballad2E	72
Dr2	033	Ballad2F	72
Dr2	034	Ballad2G	72
Dr2	035	Ballad2H	72
Dr2	036	UnplugB1	120
Dr2	037	UnplugC1	120
Dr2	038	UnplugD1	120
Dr2	039	UnplugE1	120
Dr2	040	UnplugA1	120
Dr2	041	UnplugF1	120
Dr2	042	UnplugG1	120
Dr2	043	UnplugH1	120
Dr2	044	UnplugB2	120
Dr2	045	UnplugC2	120
Dr2	046	UnplugD2	120
Dr2	047	UnplugE2	120
Dr2	048	UnplugA2	120
Dr2	049	UnplugF2	120
Dr2	050	UnplugG2	120
Dr2	051	UnplugH2	120
Dr2	052	FngrPckB	94
Dr2	053	FngrPckC	94
Dr2	054	FngrPckD	94
Dr2	055	FngrPckE	94
Dr2	056	FngrPckA	94
Dr2	057	FngrPckF	94
Dr2	058	FngrPckG	94
Dr2	059	FngrPckH	94
Dr2	060	SlowflB1	74
Dr2	061	SlowflC1	74

Категория	№ фразы	Наименование фразы	Исходный темп
Dr2	062	SlowflD1	74
Dr2	063	SlowflE1	74
Dr2	064	SlowflA1	74
Dr2	065	SlowflF1	74
Dr2	066	SlowflG1	74
Dr2	067	SlowflH1	74
Dr2	068	SlowflB2	74
Dr2	069	SlowflC2	74
Dr2	070	SlowflD2	74
Dr2	071	SlowflE2	74
Dr2	072	SlowflA2	74
Dr2	073	SlowflF2	74
Dr2	074	SlowflG2	74
Dr2	075	GtrPopB1	90
Dr2	076	GtrPopC1	90
Dr2	077	GtrPopD1	90
Dr2	078	GtrPopE1	90
Dr2	079	GtrPopA1	90
Dr2	080	GtrPopF1	90
Dr2	081	GtrPopG1	90
Dr2	082	GtrPopH1	90
Dr2	083	GtrPopB2	90
Dr2	084	GtrPopC2	90
Dr2	085	GtrPopD2	90
Dr2	086	GtrPopE2	90
Dr2	087	GtrPopA2	90
Dr2	088	GtrPopF2	90
Dr2	089	GtrPopG2	90
Dr2	090	GtrPopH2	90
Dr2	091	GtrPopD3	90
Dr2	092	GtrPopE3	90
Dr2	093	GtrPopF3	90
Dr2	094	GtrPopG3	90
Dr2	095	AnaPopB1	93
Dr2	096	AnaPopC1	93
Dr2	097	AnaPopD1	93
Dr2	098	AnaPopE1	93
Dr2	099	AnaPopA1	93
Dr2	100	AnaPopF1	93
Dr2	101	AnaPopG1	93
Dr2	102	AnaPopH1	93
Dr2	103	AnaPopC2	93
Dr2	104	AnaPopE2	93
Dr2	105	AnaPopA2	93
Dr2	106	AnaPopF2	93
Dr2	107	AnaPopG2	93
Dr2	108	PnClubB1	96
Dr2	109	PnClubC1	96
Dr2	110	PnClubD1	96
Dr2	111	PnClubE1	96
Dr2	112	PnClubA1	96
Dr2	113	PnClubF1	96
Dr2	114	PnClubG1	96
Dr2	115	PnClubH1	96
Dr2	116	PnClubB2	96
Dr2	117	PnClubC2	96
Dr2	118	PnClubD2	96
Dr2	119	PnClubE2	96
Dr2	120	PnClubA2	96
Dr2	121	PnClubF2	96
Dr2	122	PnClubG2	96
Dr2	123	PnClubH2	96
Dr2	124	70sRockB	130
Dr2	125	70sRockC	130
Dr2	126	70sRockD	130
Dr2	127	70sRockE	130
Dr2	128	70sRockA	130
Dr2	129	70sRockF	130
Dr2	130	70sRockG	130
Dr2	131	70sRockH	130
Dr2	132	PopRck1A	126
Dr2	133	PopRck1B	126

Категория	№ фразы	Наименование фразы	Исходный темп
Dr2	134	PopRck1C	126
Dr2	135	PopRck1D	126
Dr2	136	PopRck1E	126
Dr2	137	PopRck1F	126
Dr2	138	PopRck1G	126
Dr2	139	PopRck1H	126
Dr2	140	PopRck2A	120
Dr2	141	PopRck2B	120
Dr2	142	PopRck2C	120
Dr2	143	PopRck2D	120
Dr2	144	PopRck2E	120
Dr2	145	PopRck2F	120
Dr2	146	PopRck2G	120
Dr2	147	PopRck2H	120
Dr2	148	MondoRkA	94
Dr2	149	MondoRkB	94
Dr2	150	MondoRkC	94
Dr2	151	MondoRkD	94
Dr2	152	MondoRkE	94
Dr2	153	MondoRkF	94
Dr2	154	MondoRkG	94
Dr2	155	MondoRkH	94
Dr2	156	XovrRkB1	100
Dr2	157	XovrRkC1	100
Dr2	158	XovrRkD1	100
Dr2	159	XovrRkE1	100
Dr2	160	XovrRkA1	100
Dr2	161	XovrRkF1	100
Dr2	162	XovrRkG1	100
Dr2	163	XovrRkH1	100
Dr2	164	XovrRkF2	100
Dr2	165	XovrRkG2	100
Dr2	166	LatnRkB1	120
Dr2	167	LatnRkC1	120
Dr2	168	LatnRkD1	120
Dr2	169	LatnRkE1	120
Dr2	170	LatnRkA1	120
Dr2	171	LatnRkF1	120
Dr2	172	LatnRkG1	120
Dr2	173	LatnRkH1	120
Dr2	174	LatnRkB2	120
Dr2	175	LatnRkC2	120
Dr2	176	LatnRkD2	120
Dr2	177	LatnRkE2	120
Dr2	178	LatnRkA2	120
Dr2	179	LatnRkF2	120
Dr2	180	LatnRkG2	120
Dr2	181	LatnRkH2	120
Dr3	001	TranceB1	140
Dr3	002	TranceC1	140
Dr3	003	TranceD1	140
Dr3	004	TranceE1	140
Dr3	005	TranceA1	140
Dr3	006	TranceG1	140
Dr3	007	TranceH1	140
Dr3	008	TranceB2	140
Dr3	009	TranceC2	140
Dr3	010	TranceD2	140
Dr3	011	TranceE2	140
Dr3	012	TranceA2	140
Dr3	013	TranceF2	140
Dr3	014	TranceH2	140
Dr3	015	Dream B1	136
Dr3	016	Dream C1	136
Dr3	017	Dream D1	136
Dr3	018	Dream E1	136
Dr3	019	Dream A1	136
Dr3	020	Dream G1	136
Dr3	021	Dream H1	136
Dr3	022	Dream B2	136
Dr3	023	Dream E2	136
Dr3	024	Dream H2	136

Категория	№ фразы	Наименование фразы	Исходный темп
Dr3	025	Dream F3	136
Dr3	026	EuroTekA	140
Dr3	027	EuroTekB	140
Dr3	028	EuroTekC	140
Dr3	029	EuroTekD	140
Dr3	030	EuroTekE	140
Dr3	031	EuroTekF	140
Dr3	032	EuroTekG	140
Dr3	033	EuroTekH	140
Dr3	034	House A	125
Dr3	035	House B	125
Dr3	036	House C	125
Dr3	037	House D	125
Dr3	038	House E	125
Dr3	039	House F	125
Dr3	040	House G	125
Dr3	041	House H	125
Dr3	042	Ibiza B1	130
Dr3	043	Ibiza C1	130
Dr3	044	Ibiza B2	130
Dr3	045	Ibiza C2	130
Dr3	046	Ibiza D2	130
Dr3	047	Ibiza E2	130
Dr3	048	Ibiza A2	130
Dr3	049	Ibiza F2	130
Dr3	050	Ibiza G2	130
Dr3	051	Ibiza B3	130
Dr3	052	Ibiza C3	130
Dr3	053	Ibiza D3	130
Dr3	054	Ibiza E3	130
Dr3	055	Ibiza A3	130
Dr3	056	Ibiza F3	130
Dr3	057	Ibiza G3	130
Dr3	058	Ibiza H3	130
Dr3	059	ClubHsB1	128
Dr3	060	ClubHsC1	128
Dr3	061	ClubHsD1	128
Dr3	062	ClubHsE1	128
Dr3	063	ClubHsA1	128
Dr3	064	ClubHsF1	128
Dr3	065	ClubHsG1	128
Dr3	066	ClubHsH1	128
Dr3	067	ClubHsB2	128
Dr3	068	ClubHsC2	128
Dr3	069	ClubHsD2	128
Dr3	070	ClubHsE2	128
Dr3	071	ClubHsA2	128
Dr3	072	ClubHsF2	128
Dr3	073	ClubHsG2	128
Dr3	074	ClubHsH2	128
Dr3	075	GarageB1	127
Dr3	076	GarageC1	127
Dr3	077	GarageD1	127
Dr3	078	GarageE1	127
Dr3	079	GarageA1	127
Dr3	080	GarageF1	127
Dr3	081	GarageG1	127
Dr3	082	GarageH1	127
Dr3	083	GarageB2	127
Dr3	084	GarageC2	127
Dr3	085	GarageD2	127
Dr3	086	GarageA2	127
Dr3	087	GarageF2	127
Dr3	088	GarageG2	127
Dr3	089	GarageH2	127
Dr3	090	LatnHsB1	138
Dr3	091	LatnHsC1	138
Dr3	092	LatnHsD1	138
Dr3	093	LatnHsE1	138
Dr3	094	LatnHsF1	138
Dr3	095	LatnHsH1	138
Dr3	096	LatnHsC2	138

Категория	№ фразы	Наименование фразы	Исходный темп
Dr3	097	LatnHsE2	138
Dr3	098	LatnHsA2	138
Dr3	099	LatnHsF2	138
Dr3	100	LatnHsG2	138
Dr3	101	LatnHsH2	138
Dr3	102	ChlOutB1	79
Dr3	103	ChlOutC1	79
Dr3	104	ChlOutD1	79
Dr3	105	ChlOutE1	79
Dr3	106	ChlOutA1	79
Dr3	107	ChlOutF1	79
Dr3	108	ChlOutG1	79
Dr3	109	ChlOutH1	79
Dr3	110	ChlOutB2	79
Dr3	111	ChlOutC2	79
Dr3	112	ChlOutD2	79
Dr3	113	ChlOutE2	79
Dr3	114	ChlOutA2	79
Dr3	115	ChlOutF2	79
Dr3	116	ChlOutG2	79
Dr3	117	ChlOutH2	79
Dr3	118	SynPop B	90
Dr3	119	SynPop C	90
Dr3	120	SynPop D	90
Dr3	121	SynPop E	90
Dr3	122	SynPop A	90
Dr3	123	SynPop F	90
Dr3	124	SynPop G	90
Dr3	125	SynPop H	90
Dr3	126	RtrPopB1	126
Dr3	127	RtrPopC1	126
Dr3	128	RtrPopD1	126
Dr3	129	RtrPopE1	126
Dr3	130	RtrPopA1	126
Dr3	131	RtrPopF1	126
Dr3	132	RtrPopG1	126
Dr3	133	RtrPopH1	126
Dr3	134	RtrPopB2	126
Dr3	135	RtrPopC2	126
Dr3	136	RtrPopE2	126
Dr3	137	RtrPopA2	126
Dr3	138	RtrPopF2	126
Dr3	139	RtrPopG2	126
Dr3	140	RtrPopH2	126
Dr3	141	Disco B1	110
Dr3	142	Disco C1	110
Dr3	143	Disco D1	110
Dr3	144	Disco E1	110
Dr3	145	Disco F1	110
Dr3	146	Disco G1	110
Dr3	147	Disco H1	110
Dr3	148	Disco B2	110
Dr3	149	Disco C2	110
Dr3	150	Disco D2	110
Dr3	151	Disco E2	110
Dr3	152	Disco A2	110
Dr3	153	Disco F2	110
Dr3	154	Disco G2	110
Dr3	155	DrumnBaA	154
Dr3	156	DrumnBaB	154
Dr3	157	DrumnBaC	154
Dr3	158	DrumnBaD	154
Dr3	159	DrumnBaE	154
Dr3	160	DrumnBaF	154
Dr3	161	DrumnBaG	154
Dr3	162	DrumnBaH	154
Dr4	001	Samba B1	114
Dr4	002	Samba D1	114
Dr4	003	Samba E1	114
Dr4	004	Samba A1	114
Dr4	005	Samba F1	114
Dr4	006	Samba G1	114

Категория	№ фразы	Наименование фразы	Исходный темп
Dr4	007	Samba H1	114
Dr4	008	Samba B2	114
Dr4	009	Samba C2	114
Dr4	010	Samba D2	114
Dr4	011	Samba E2	114
Dr4	012	Samba A2	114
Dr4	013	Samba F2	114
Dr4	014	Samba G2	114
Dr4	015	Samba H2	114
Dr4	016	Salsa B1	123
Dr4	017	Salsa C1	123
Dr4	018	Salsa D1	123
Dr4	019	Salsa E1	123
Dr4	020	Salsa A1	123
Dr4	021	Salsa F1	123
Dr4	022	Salsa G1	123
Dr4	023	Salsa H1	123
Dr4	024	Salsa B2	123
Dr4	025	Salsa C2	123
Dr4	026	Salsa D2	123
Dr4	027	Salsa E2	123
Dr4	028	Salsa A2	123
Dr4	029	Salsa F2	123
Dr4	030	Salsa G2	123
Dr4	031	Salsa H2	123
Dr4	032	MontnoB1	100
Dr4	033	MontnoC1	100
Dr4	034	MontnoD1	100
Dr4	035	MontnoE1	100
Dr4	036	MontnoA1	100
Dr4	037	MontnoF1	100
Dr4	038	MontnoG1	100
Dr4	039	MontnoH1	100
Dr4	040	MontnoB2	100
Dr4	041	MontnoC2	100
Dr4	042	MontnoD2	100
Dr4	043	MontnoE2	100
Dr4	044	MontnoA2	100
Dr4	045	MontnoF2	100
Dr4	046	MontnoG2	100
Dr4	047	MontnoH2	100
Dr4	048	Latin A	120
Dr4	049	Latin B	120
Dr4	050	Latin C	120
Dr4	051	Latin D	120
Dr4	052	Latin E	120
Dr4	053	Latin F	120
Dr4	054	Latin G	120
Dr4	055	Latin H	120
Dr4	056	Regge1B1	102
Dr4	057	Regge1C1	102
Dr4	058	Regge1D1	102
Dr4	059	Regge1E1	102
Dr4	060	Regge1A1	102
Dr4	061	Regge1F1	102
Dr4	062	Regge1G1	102
Dr4	063	Regge1H1	102
Dr4	064	Regge1B2	102
Dr4	065	Regge1C2	102
Dr4	066	Regge1D2	102
Dr4	067	Regge1E2	102
Dr4	068	Regge1A2	102
Dr4	069	Regge1F2	102
Dr4	070	Regge2B1	92
Dr4	071	Regge2C1	92
Dr4	072	Regge2D1	92
Dr4	073	Regge2E1	92
Dr4	074	Regge2A1	92
Dr4	075	Regge2F1	92
Dr4	076	Regge2G1	92
Dr4	077	Regge2H1	92
Dr4	078	Regge2B2	92

Категория	№ фразы	Наименование фразы	Исходный темп
Dr4	079	Regge2C2	92
Dr4	080	Regge2D2	92
Dr4	081	Regge2E2	92
Dr4	082	Regge2A2	92
Dr4	083	Regge2F2	92
Dr4	084	Regge2G2	92
Dr4	085	Regge2H2	92
Dr4	086	SpanshB1	120
Dr4	087	SpanshC1	120
Dr4	088	SpanshD1	120
Dr4	089	SpanshE1	120
Dr4	090	SpanshA1	120
Dr4	091	SpanshF1	120
Dr4	092	SpanshG1	120
Dr4	093	SpanshH1	120
Dr4	094	SpanshB2	120
Dr4	095	SpanshC2	120
Dr4	096	SpanshD2	120
Dr4	097	SpanshE2	120
Dr4	098	SpanshA2	120
Dr4	099	SpanshF2	120
Dr4	100	SpanshG2	120
Dr4	101	SpanshH2	120
Dr4	102	TurkshB1	105
Dr4	103	TurkshC1	105
Dr4	104	TurkshD1	125
Dr4	105	TurkshE1	125
Dr4	106	TurkshA1	86
Dr4	107	TurkshF1	105
Dr4	108	TurkshG1	105
Dr4	109	TurkshH1	105
Dr4	110	TurkshB2	105
Dr4	111	TurkshC2	105
Dr4	112	TurkshD2	125
Dr4	113	TurkshE2	125
Dr4	114	TurkshA2	86
Dr4	115	TurkshF2	105
Dr4	116	TurkshG2	105
Dr4	117	TurkshH2	105

Многие сообщения MIDI, приведенные в разделе «Формат данных MIDI», выражены в 16-ричной или двоичной форме. 16-ричные числа могут отмечаться буквой «H» в конце. Буква «n» означает определенное целое число.
В таблице, приведенной ниже, устанавливается соответствие между десятичными числами и 16-ричными числами.

Десятичное	16-ричное	Десятичное	16-ричное
0	00	64	40
1	01	65	41
2	02	66	42
3	03	67	43
4	04	68	44
5	05	69	45
6	06	70	46
7	07	71	47
8	08	72	48
9	09	73	49
10	0A	74	4A
11	0B	75	4B
12	0C	76	4C
13	0D	77	4D
14	0E	78	4E
15	0F	79	4F
16	10	80	50
17	11	81	51
18	12	82	52
19	13	83	53
20	14	84	54
21	15	85	55
22	16	86	56
23	17	87	57
24	18	88	58
25	19	89	59
26	1A	90	5A
27	1B	91	5B
28	1C	92	5C
29	1D	93	5D
30	1E	94	5E
31	1F	95	5F
32	20	96	60
33	21	97	61
34	22	98	62
35	23	99	63
36	24	100	64
37	25	101	65
38	26	102	66
39	27	103	67
40	28	104	68
41	29	105	69
42	2A	106	6A
43	2B	107	6B
44	2C	108	6C
45	2D	109	6D
46	2E	110	6E
47	2F	111	6F
48	30	112	70
49	31	113	71
50	32	114	72
51	33	115	73
52	34	116	74
53	35	117	75
54	36	118	76
55	37	119	77
56	38	120	78
57	39	121	79
58	3A	122	7A
59	3B	123	7B
60	3C	124	7C
61	3D	125	7D
62	3E	126	7E
63	3F	127	7F

Дополнительные примечания

- Например, 144 - 159 (десятичные) / 9nH/ 1001 0000 - 1001 1111 (Двоичные) означают сообщение включения ноты соответственно для каналов с 1-го по 16-й. 176 - 191 / BnH/ 1011 0000 - 1101 1111 означают сообщение изменения программы соответственно для каналов с 1-го по 16-й. 240 / F0H/ 1111 0000 располагается в начале данных и означает эксклюзивное системное сообщение.
- aaH (16-ричное) / 0aaaaaaa (Двоичное) означает адреса данных. Адреса данных содержат High, Mid и Low.
- bbH / 0bbbbbbb означает счетчик битов.
- ccH / 0ccccccc означает контрольную сумму.
- ddH / 0ddddddd означает данные / значение.

ПАРТИЯ СЕКВЕНСОРА / СИНТЕЗАТОРА

(1) ПОТОК ПЕРЕДАЧИ

```
MIDI <-+-[SW1]--+---------NOTE ON/OFF                      9nH
 OUT   |        |
       |        +---------KEY'S AFTER TOUCH                AnH (Seq only)
       |        |
       |        +---------CONTROL CHANGE (All in Seq)
       |        |           MODULATION                     BnH,01H
       |        |           VOLUME                         BnH,07H
       |        |           PAN                            BnH,0AH
       |        |           SUSTAIN SWITCH                 BnH,40H
       |        |           FILTER RESONANCE               BnH,47H
       |        |           EG RELEASE TIME                BnH,48H
       |        |           EG ATTACK TIME                 BnH,49H
       |        |           FILTER CUTOFF FREQ             BnH,4AH
       |        |           EG DECAY TIME                  BnH,4BH
       |        |           REVERB SEND                    BnH,5BH
       |        |           CHORUS SEND                    BnH,5DH
       |        |           ASSIGNABLE CONTROLLERS         BnH,(00H..5FH)
       |        |
       |        +--[SW7]--BANK SEL MSB                     BnH,00H
       |        |         BANK SEL LSB                     BnH,20H
       |        |
       |        +---------CHANNEL MODE MESSAGE (Seq only)
       |        |           RESET ALL CONTROLLERS          BnH,79H
       |        |           LOCAL CONTROL                  BnH,7AH
       |        |           OMNI MODE OFF                  BnH,7CH
       |        |           OMNI MODE ON                   BnH,7DH
       |        |           MONO MODE ON                   BnH,7EH
       |        |           POLY MODE ON                   BnH,7FH
       |        |
       |        +--[SW8]--PROGRAM CHANGE                   CnH
       |        |
       |        +---------CHANNEL AFTER TOUCH              DnH
       |        |
       |        +---------PITCH BEND CHANGE                EnH
       |
       +--[SW4]------------SYSTEM COMMON MESSAGE
       |                    SONG POSITION POINTER          F2H
       |                    SONG SELECT                    F3H
       |
       +--[SW4]-----------SYSTEM REALTIME MESSAGE
       |                    TIMING CLOCK                   F8H
       |                    START                          FAH
       |                    CONTINUE                       FBH
       |                    STOP                           FCH
       |
       +-------------------ACTIVE SENSING                  FEH
       |
       +--[SW5]-+----------SYSTEM EXCLUSIVE MESSAGE (All in Seq)
       |        +--[SW6]-- <BULK DUMP>
       |        |           F0H 43H 0nH 7FH 00H bhH blH ahH amH alH ddH...ddH ccH F7H
       |        |
       |        +--[SW6]-- <PARAMETER CHANGE>
       |                    F0H 43H 1nH 7FH 00H ahH amH alH ddH...ddH F7H
       |
       +-------------------SYSTEM EXCLUSIVE MESSAGE
       |                    IDENTITY REPLY
       |                    F0H 7EH 7FH 06H 02H 43H 00H 41H 33H (or 34H) 06H 00H 00H 00H
       |                    7FH F7H
       +--[SW3,4]----------MIDI MACHINE CONTROL
                            STOP                           F0H 7FH 7FH 06H 01H F7H
                            DEFERRED PLAY                  F0H 7FH 7FH 06H 03H F7H
                            LOCATE                         F0H 7FH 7FH 06H 44H 06H 01H hrH
                                                           mnH scH frH ffH F7H
```

[SW1] MIDI Transmit Channel
In the Master mode: complies with Zone Transmit Channel.
In the mode other than the Master: complies with Keyboard Transmit Channel.
The sequence data played back in the Song/Pattern mode is transmitted according to the MIDI Filter settings.
[SW2] MIDI Control Mode
[SW3] MIDI Sync (transmitted when the MIDI Sync is set to MTC.)
[SW4] Seq MIDI Control
[SW5] MIDI Device Number
When set to all, transmitted via 1.
The sequence data played back in the Song/Pattern mode is transmitted according to the MIDI Filter settings.
[SW6] The System data can be transmitted/recognized in any mode.
Regarding the other types of data, it depends on the current mode whether they can be transmitted/recognized or not.
[SW7] SYSTEM Bank Select Switch
[SW8] SYSTEM Program Change Switch

(2) ПОТОК ПРИЕМА

```
MIDI>-+-[SW10]--+---------NOTE OFF                        8nH
      |         |
      |         +---------NOTE ON/OFF                     9nH
      |         |
      |         +---------KEY'S AFTER TOUCH               AnH (Seq only)
      |         |
      |         +---------CONTROL CHANGE (All in Seq)
      |         |           MODULATION                    BnH,01H
      |         |           PORTAMENTO TIME               BnH,05H
      |         |           DATA ENTRY MSB                BnH,06H
      |         |           DATA ENTRY LSB                BnH,26H
      |         |           MAIN VOLUME                   BnH,07H
      |         |           PAN                           BnH,0AH
      |         |           EXPRESSION                    BnH,0BH
      |         |           SUSTAIN SWITCH                BnH,40H
      |         |           PORTAMENTO SWITCH             BnH,41H
      |         |           SOSTENUTO                     BnH,42H
      |         |           HARMONIC CONTENT              BnH,47H
      |         |           EG RELEASE TIME               BnH,48H
      |         |           EG ATTACK TIME                BnH,49H
      |         |           BRIGHTNESS                    BnH,4AH
      |         |           EG DECAY TIME                 BnH,4BH
      |         |           EFFECT1 DEPTH                 BnH,5BH
      |         |           EFFECT3 DEPTH                 BnH,5DH
      |         |           DATA ENTRY INC                BnH,60H
      |         |           DATA ENTRY DEC                BnH,61H
      |         |           ALL SOUND OFF                 BnH,78H
      |         |           ASSIGNABLE CONTROLLER         BnH,(00H..5FH)
      |         |           RPN
      |         |                 PITCH BEND SENS.        BnH,64H,00H,65H,00H,06H,mmH
      |         |                 FINE TUNING             BnH,64H,01H,65H,00H,06H,mmH,
      |         |                                         26H,11H
      |         |                 COARSE TUNING           BnH,64H,02H,65H,00H,06H,mmH
      |         |                 RPN RESET               BnH,64H,7FH,65H,7FH
      |         +--[SW2]--EG SUSTAIN LEVEL                BnH,1FH
      |         |
      |         +--[SW7]--BANK SEL MSB                    BnH,00H
      |         |         BANK SEL LSB                    BnH,20H
      |         |
      |         +---------CHANNEL MODE MESSAGE
      |         |           RESET ALL CONTROLLERS         BnH,79H
      |         |           LOCAL CONTROL                 BnH,7AH
      |         |           OMNI MODE OFF                 BnH,7CH
      |         |           OMNI MODE ON                  BnH,7DH
      |         |           MONO MODE ON                  BnH,7EH
      |         |           POLY MODE ON                  BnH,7FH
      |         |
      |         +--[SW8]--PROGRAM CHANGE                  CnH
      |         |
      |         +---------CHANNEL AFTER TOUCH             DnH
      |         |
      |         +---------PITCH BEND CHANGE               EnH
      |
      +--[SW3]------------SYSTEM COMMON MESSAGE
      |                   MTC QUARTER FRAME MESSAGE       F1H
      |
      +--[SW4]------------SYSTEM COMMON MESSAGE
      |                   SONG POSITION POINTER           F2H
      |                   SONG SELECT                     F3H
      |
      +--[SW3]------------SYSTEM REALTIME MESSAGE
      |                   TIMING CLOCK                    F8H
      |
      +--[SW4]------------SYSTEM REALTIME MESSAGE
      |                   START                           FAH
      |                   CONTINUE                        FBH
      |                   STOP                            FCH
      |
      +-------------------ACTIVE SENSING                   FEH
      |
      +--[SW5]-+-----+----SYSTEM EXCLUSIVE MESSAGE (All in Seq)
      |        |            MIDI MASTER VOLUME             F0H 7FH 7FH 04H 01H llH mmH F7H
      |        |
      |        +--[SW9]---<BULK DUMP>
      |        |            F0H 43H 0nH 7FH 00H bhH blH ahH amH alH ddH...ddH ccH F7H
      |        |
      |        +--[SW6]---<PARAMETER CHANGE>
      |        |            F0H 43H 1nH 7FH 00H ahH amH alH ddH...ddH F7H
      |        |
      |        +--[SW6]---<BULK DUMP REQUEST>
      |        |            F0H 43H 2nH 7FH 00H ahH amH alH ddH...ddH F7H
      |        |
      |        +--[SW6]---<PARAMETER REQUEST>
      |        |            F0H 43H 3nH 7FH 00H ahH amH alH F7H
      |        |
      |        +--[SW11]--XG SYSTEM ON
      |        |            F0H 43H 1nH 4CH 00H 00H 7EH 00H F7H
      |        |
      |        +--[SW11]--GM MODE ON
      |                     F0H 7EH 7FH 09H 01H F7H
      |
      +-------------------SYSTEM EXCLUSIVE MESSAGE
                            IDENTITY REQUEST                F0H 7EH 0nH 06H 01H F7H
                            SECTION CONTROL                 F0H 43H 7EH 00H ssH 7FH F7H
                                                            (Pattern Mode only)
```

[SW2] MIDI Control Mode
[SW3] MIDI Sync (can be set to “internal,” “MIDI,” or “MTC.”)
[SW4] Seq MIDI Control
[SW5] MIDI Device Number
When this is not set to off, the MIDI Master Volume can be recognized in any mode.
The sequence data played back in the Song/Pattern mode is transmitted according to the MIDI Filter settings.
[SW6] The System data can be transmitted/recognized in any mode.
Regarding the other types of data, it depends on the current mode whether they can be transmitted/recognized or not.
[SW7] SYSTEM Bank Select Switch
[SW8] SYSTEM Program Change Switch
[SW9] SYSTEM Bulk Protect and same as SW6.
[SW10] MIDI Receive Channel and Receive Filter
In the Song/Pattern mode: complies with Part Receive Channel and Part Receive Switch.
In the other mode: complies with Basic Receive Channel.
The sequence data recorded to the Song/Pattern is recognized according to the MIDI Filter settings.
[SW11] Recognized only in the Song/Pattern mode.

(3) ПРИЕМ / ПЕРЕДАЧА ДАННЫХ

(3-1) СООБЩЕНИЯ ГОЛОСА КАНАЛА

(3-1-1) NOTE OFF

```
STATUS              1000nnnn(8nH)          n = 0 - 15 CHANNEL NUMBER
NOTE No.            0kkkkkkk               k = 0 (C-2) - 127 (G8)
VELOCITY            0vvvvvvv               V: ignored
```

Только прием.

(3-1-2) NOTE ON/OFF

```
STATUS              1001nnnn(9nH)          n = 0 - 15 CHANNEL NUMBER
NOTE NUMBER         0kkkkkkk               k = 0(C-2) - 127(G8)
VELOCITY    NOTE ON 0vvvvvvv(v≠0)
          NOTE OFF  0vvvvvvv(v=0)
```

(3-1-3) CONTROL CHANGE

```
STATUS              1011nnnn(BnH)          n = 0 - 15 CHANNEL NUMBER
CONTROL NUMBER      0ccccccc
CONTROL VALUE       0vvvvvvv

* TRANSMITTED CONTROL NUMBER
c =  0              BANK SEL MSB           ; v = 0 - 127                    *3
c = 32              BANK SEL LSB           ; v = 0 - 127                    *3
c =  1              MODULATION             ; v = 0 - 127
c =  7              MAIN VOLUME            ; v = 0 - 127
c = 10              PAN                    ; v = 0 - 127
c = 11              EXPRESSION             ; v = 0 - 127
c = 64              SUSTAIN SWITCH         ; v = 0,  127
c = 71              FILTER RESONANCE       ; v = 0:-64 - 64: 0 - 127:+63
c = 72              EG RELEASE TIME        ; v = 0:-64 - 64: 0 - 127:+63
c = 73              EG ATTACK TIME         ; v = 0:-64 - 64: 0 - 127:+63
c = 74              FILTER CUTOFF FREQ     ; v = 0:-64 - 64: 0 - 127:+63
c = 75              EG DECAY TIME          ; v = 0:-64 - 64: 0 - 127:+63
c = 91              REVERB SEND            ; v = 0,  127
c = 93              CHORUS SEND            ; v = 0,  127
c = 0..95           ASSIGNABLE CONTROLLERS ; v = 0 - 127                    *6
```

Партия секвенсора будет воспроизводить все записанные управляющие сообщения.

```
* RECEIVED CONTROL NUMBER
c =  0              BANK SEL MSB           ; v = 0 - 127                    *3
c = 32              BANK SEL LSB           ; v = 0 - 127                    *3
c =  1              MODULATION             ; v = 0 - 127
c =  5              PORTAMENTO TIME        ; v = 0 - 127                    *2
c =  6              DATA ENTRY MSB         ; v = 0 - 127                    *1
c = 38              DATA ENTRY LSB         ; v = 0 - 127                    *1
c =  7              MAIN VOLUME            ; v = 0 - 127
c = 10              PAN                    ; v = 0 - 127
c = 11              EXPRESSION             ; v = 0 - 127
c = 31              EG SUSTAIN LEVEL       ; v = 0:-64 - 64:0 - 127:+63    *2,*5
c = 64              SUSTAIN SWITCH         ; v = 0 - 63:OFF, 64 - 127:ON    *2
c = 65              PORTAMENTO SWITCH      ; v = 0 - 63:OFF, 64 - 127:ON    *2
c = 66              SOSTENUTO              ; v = 0 - 63:OFF, 64 - 127:ON    *2
c = 71              HARMONIC CONTENT       ; v = 0:-64 - 64:0 - 127:+63
c = 72              EG RELEASE TIME        ; v = 0:-64 - 64:0 - 127:+63     *2
c = 73              EG ATTACK TIME         ; v = 0:-64 - 64:0 - 127:+63
c = 74              BRIGHTNESS             ; v = 0:-64 - 64:0 - 127:+63
c = 75              EG DECAY TIME          ; v = 0:-64 - 64:0 - 127:+63
c = 91              EFFECT1 DEPTH          ; v = 0 - 127
c = 93              EFFECT3 DEPTH          ; v = 0 - 127
c = 96              DATA ENTRY INC         ; v = 127                        *1
c = 97              DATA ENTRY DEC         ; v = 127                        *1
c = 0..95           ASSIGNABLE CONTROLLER  ; v = 0 - 127                    *6
c = 0..95           ARPEGGIO SW            ; v = 0 - 63:OFF, 64 - 127:ON    *6
c = 0..95           ARPEGGIO HOLD          ; v = 0 - 63:OFF, 64 - 127:ON    *6
```

Все события изменения управления (Control Change) можно записать в песню или в паттерн.
*1 Используется только если значение установлено с помощью PRN.
*2 Не действует для голосов ударных инструментов.
*3 Между BANK CHANGE и PROGRAM установлены следующие соотношения:

CATEGORY	MSB	LSB	PROGRAM No.	
GM Voice	0	0	0..127 (1..128)	
GM Drum Voice	127	0	0..1 (1..2)	
Normal Voice Preset 1	63	0	0..127 (1..128)	
Preset 2	63	1	0..127 (1..128)	
Preset 3	63	2	0..127 (1..128)	
Preset 4	63	3	0..127 (1..128)	
User1	63	8	0..127 (1..128)	
User2	63	9	0..127 (1..128)	
Drum Voice Preset	63	32	0..63 (1..64)	
User	63	40	0..31 (1..32)	
Performance User1	63	64	0..127 (1..128)	
User2	63	65	0..127 (1..128)	
Mixing Voice	63	60	0..15 (1..16)	*8

*5 Может выбираться только в том случае, когда установлена соответствующая вставная панель.
*6 Передается / принимается только при выборе варианта MODE2 для параметра Control Change Mode/

BREATH CONTROLLER	2
FOOT CONTROLLER	4
Assign 1	16
Assign 2	17
Assign A	18
Assign B	19
FOOT SWITCH	88
ARPEGGIO HOLD	89
ARPEGGIO SWITCH	90

* 8 Исходные значения контрольных номеров для ASSIGNABLE CONTROLLER:

Параметр PORTAMENTO TIME определяет время, за которое высота тона достигает следующей ноты, исполняемой при включенном PORTAMENTO SWITCH.

Панорама меняет свое относительное положение в соответствии со значением предварительной настройки для каждого из голосов.

EFFECT1 DEPTH управляет уровнем передачи реверберации.

EFFECT3 DEPTH управляет уровнем передачи хоруса.

HARMONIC CONTENT регулирует предварительную настройку резонанса для каждого из голосов. Установленное значение прибавляется к центральному значению, 64, или вычитается из него, так как это параметр смещения. Чем больше значение, тем больше резонансов будет в итоговом звучании. Эффективный диапазон может быть уже, чем диапазон, который Вы можете назначить - в зависимости от выбранного голоса.

Параметры EG ATTACK, EG DECAY TIME, EG SUSTAIN LEVEL и EG RELEASE TIME регулируют предварительную настройку огибающей для каждого из голосов. Установленное значение прибавляется к центральному значению, 64, или вычитается из него, так как это параметр смещения.

BRIGHTNESS регулирует предварительную настройку частоты среза для каждого из голосов. Установленное значение прибавляется к центральному значению, 64, или вычитается из него, так как это параметр смещения. Чем меньше это значение, тем ниже будет частота среза. Эффективный диапазон может быть уже, чем диапазон, который Вы можете назначить - в зависимости от выбранного голоса.

Выбор банка реально выполняется при приеме программного изменения. Значения Bank Select и Program Change, которые не поддерживаются Yamaha, будут игнорироваться, однако будут передаваться во вставленную панель.

(3-1-4) PROGRAM CHANGE

```
STATUS          1100nnnn(CnH)      n = 0 - 15 CHANNEL NUMBER
PROGRAM NUMBER  0ppppppp           p = 0 - 127
```

(3-1-5) CHANNEL AFTER TOUCH

```
STATUS          1101nnnn(DnH)      n = 0 - 15 CHANNEL NUMBER
VALUE           0vvvvvvv           v = 0 - 127 AFTER TOUCH VALUE
```

(3-1-6) PITCH BEND CHANGE

```
STATUS          1110nnnn(EnH)      n = 0 - 15 CHANNEL NUMBER
LSB             0vvvvvvv           PITCH BEND CHANGE LSB
MSB             0vvvvvvv           PITCH BEND CHANGE MSB
```

Передача с разрешением 7 бит.

(3-2) СООБЩЕНИЯ РЕЖИМА КАНАЛА

```
STATUS          1011nnnn(BnH)      n = 0 - 15 CHANNEL NUMBER
CONTROL NUMBER  0ccccccc           c = CONTROL NUMBER
CONTROL VALUE   0vvvvvvv           v = DATA VALUE
```

(3-2-1) ALL SOUND OFF (CONTROL NUMBER = 78H, DATA VALUE = 0)

Все воспроизводящиеся в данный момент звуки в определенном канале, включая такие сообщения канала, как note-on и hold-on, при приеме данного сообщения будут отключены.

(3-2-2) RESET ALL CONTROLLERS (CONTROL NUMBER = 79H, DATA VALUE = 0)

Сброс установленных значений для перечисленных ниже контроллеров.

```
PITCH BEND CHANGE        0 (center)
CHANNEL AFTER TOUCH      0 (minimum)
MODULATION               0 (minimum)
EXPRESSION               127 (maximum)
BREATH CONTROLLER        127 (maximum)
FOOT CONTROLLER          127 (maximum)
Assign A                 0 (center)
Assign B                 0 (center)
Assign 1                 0 (center)
Assign 2                 0 (center)
SUSTAIN SWITCH           0 (off)
SOSTENUTO SWITCH         0 (off)
RPN
```

Следующие данные не сбрасываются:
PROGRAM CHANGE, BANK SELECT MSB/LSB, VOLUME, PAN, HARMONIC CONTENT, SUSTAIN LEVEL, RELEASE TIME, ATTACK TIME, DECAY TIME, BRIGHTNESS, EFFECT SEND LEVEL 1, EFFECT SEND LEVEL 3, PORTAMENTO SWITCH, PITCH BEND SENSITIVITY, FINE TUNING, COARSE TUNING

(3-2-3) ALL NOTE OFF (CONTROL NUMBER = 7BH, DATA VALUE = 0)

Все установленные в данный момент ноты в определенном канале, при приеме данного сообщения будут отключены. Однако если включены Sustain или Sostenuto, ноты продолжат звучать, пока не завершатся.

(3-2-4) OMNI MODE OFF (CONTROL NUMBER = 7CH, DATA VALUE = 0)

Выполняет ту же функцию, что и при приеме ALL NOTES OFF.
Устанавливает VOICE RECEIVE CHANNEL в состояние «OMNI OFF», канал 1.

(3-2-5) OMNI MODE ON (CONTROL NUMBER = 7DH, DATA VALUE = 0)

Выполняет ту же функцию, что и при приеме ALL NOTES OFF.
Устанавливает VOICE RECEIVE CHANNEL в состояние «OMNI ON».

(3-2-6) MONO (CONTROL NUMBER = 7EH, DATA VALUE = 0...16)

Выполняет ту же функцию, что и при приеме ALL SOUND OFF. Если 3-й байт (mono) имеет значение от 0 до 16, канал перейдет в режим Mode4 (m = 1).
В режиме Voice может устанавливаться режим Mode2 (m = 1) - в соответствии с VOICE RECEIVE CHANNEL.

(3-2-7) POLY (CONTROL NUMBER = 7FH, DATA VALUE = 0)

Выполняет ту же функцию, что и при приеме ALL SOUND OFF. Канал перейдет в режим Mode3.
В режиме Voice может устанавливаться режим Mode1 - в соответствии с VOICE RECEIVE CHANNEL.

(3-3) НОМЕР ЗАРЕГИСТРИРОВАННОГО ПАРАМЕТРА

```
STATUS          1011nnnn(BnH)      n = 0 - 15 CHANNEL NUMBER
LSB             01100100(64H)
RPN LSB         0ppppppp           p = RPN LSB (Refer to the table as shown below.)
MSB             01100101(65H)
RPN MSB         0qqqqqqq           q = RPN MSB (Refer to the table as shown below.)
DATA ENTRY MSB  00000110(06H)
DATA VALUE      0mmmmmmm           m = Data Value
DATA ENTRY LSB  00100110(26H)
DATA VALUE      01111111           l = Data Value
```

Сначала назначьте параметр с помощью номеров PRN MSB/LSB. Затем установите его значение в соответствии с введенными в MSB/LSB данными.

```
RPN      D.ENTRY
LSB MSB  MSB LSB  PARAMETER NAME          DATA RANGE

00H 00H  mmH ---  PITCH BEND SENSITIVITY  00H - 18H (0 - 24 semitones)
01H 00H  mmH llH  MASTER FINE TUNE        {mmH,llH}={00H,00H}-{40H,00H}-{7FH,7FH}
                                          (-8192*100/8192) - 0 - (+8192*100/8192)
02H 00H  mmH ---  MASTER COARSE TUNE      28H - 40H - 58H (-24 - 0 - +24 semitones)
7FH 7FH  --- ---  RPN RESET
                  RPN numbers will be left not designated.
                  The internal values are not affected.
```

(3-4) НОМЕР ЗАРЕГИСТРИРОВАННОГО ПАРАМЕТРА

Применимые параметры отсутствуют.

(3-5) СИСТЕМНЫЕ СООБЩЕНИЯ РЕАЛЬНОГО ВРЕМЕНИ

(3-5-1) ACTIVE SENSING

```
STATUS          11111110(FEH)
```

Передается каждые 200 мс.
Сразу же по приеме кода инструмент начинает передачу. Если состояние или данные не передаются свыше приблизительно 350 мс, буфер приема MIDI очищается, и воспроизводимые в данный момент звуки отключатся.

(3-6) ЭКСКЛЮЗИВНЫЕ СИСТЕМНЫЕ СООБЩЕНИЯ

(3-6-1) UNIVERSAL NON REALTIME MESSAGE

(3-6-1-1) GENERAL MIDI MODE ON

```
F0H 7EH 7FH 09H 01H F7H
```

Встроенный блок тонального генератора будет принимать данное сообщение, если инструмент находится в режиме Song / Pattern.

(3-6-1-2) IDENTITY REQUEST (Receive only)

```
F0H 7EH 0nH 06H 01H F7H
("n" = Device No. However, this instrument receives under "omni.")
```

(3-6-1-3) IDENTITY REPLY (Transmit only)

```
F0H 7EH 7FH 06H 02H 43H 00H 41H ddH ddH 00H 00H 00H 7FH F7H

dd; Device Number Code
MO6: 33 06
MO8: 34 06
```

(3-6-2) UNIVERSAL REALTIME MESSAGE

(3-6-2-1) MIDI MASTER VOLUME

```
F0H 7FH 7FH 04H 01H llH mmH F7H
```

Устанавливает значение MASTER VOLUME.
Значение «mm» используется для установки общей громкости (значение «ll» игнорируется).

(3-6-3) PARAMETER CHANGE

```
11110000        F0          Exclusive Status
01000011        43          YAMAHA ID
0001nnnn        1n          Device Number
01111111        7F          Model ID
00000000        00          Model ID
0aaaaaaa        aaaaaaa     Address High
0aaaaaaa        aaaaaaa     Address Mid
0aaaaaaa        aaaaaaa     Address Low
0ddddddd        dddddddd    Data
|               |
11110111        F7          End of Exclusive
```

Для параметров с объемом данных 2 или более передается соответствующее количество байтов данных.
См. ниже таблицу данных MIDI, где приведены адреса и счетчики битов.
В режиме REMOTE SWITCH параметр Device Number будет приниматься вне зависимости от значения.

(3-6-4) BULK DUMP

```
11110000        F0          Exclusive Status
01000011        43          YAMAHA ID
0000nnnn        0n          Device Number
01111111        7F          Model ID
00000000        00          Model ID
0bbbbbbb        bbbbbbb     Byte Count
0bbbbbbb        bbbbbbb     Byte Count
0aaaaaaa        aaaaaaa     Address High
0aaaaaaa        aaaaaaa     Address Mid
0aaaaaaa        aaaaaaa     Address Low
0               0           Data
|               |
0ccccccc        ccccccc     Check-sum
11110111        F7          End of Exclusive
```

См. адрес и счетчик битов в таблице пересылки массива данных BULK DUMP ниже.
Контрольная сумма представляет собой дополнение до 0 7 младших битов после сложения счетчика битов, начального адреса, данных и собственно контрольной суммы.

(3-6-5) DUMP REQUEST

```
11110000        F0          Exclusive Status
01000011        43          YAMAHA ID
0010nnnn        2n          Device Number
01111111        7F          Model ID
00000000        00          Model ID
0aaaaaaa        aaaaaaa     Address High
0aaaaaaa        aaaaaaa     Address Mid
0aaaaaaa        aaaaaaa     Address Low
11110111        F7          End of Exclusive
```

См. таблицу запроса пересылки DUMP REQUEST ниже, где приведены адрес и счетчик битов.

(3-6-6) PARAMETER REQUEST

```
11110000        F0          Exclusive Status
01000011        43          YAMAHA ID
0011nnnn        3n          Device Number
01111111        7F          Model ID
00000000        00          Model ID
0aaaaaaa        aaaaaaa     Address High
0aaaaaaa        aaaaaaa     Address Mid
0aaaaaaa        aaaaaaa     Address Low
11110111        F7          End of Exclusive
```

См. ниже таблицу данных MIDI, где приведены адреса и счетчики битов.

(4) ОБЗОР СИСТЕМЫ
(Клавиатура, секвенсор и тональный генератор)

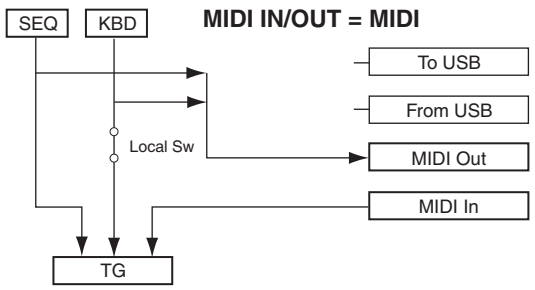

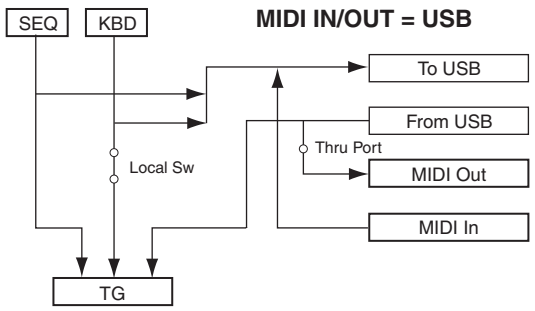

Хотя три типа данных (note on / note off, принимаемые по интерфейсу MIDI, воспроизводящиеся встроенным секвенсором и исполняемые на клавиатуре), будут различаться, другие контроллеры (сообщения каналов) реагируют на все ноты одинаково.

Сигнал ALL SOUNDS OFF стирает все звуки в заданных каналах и клавиатуры, и данных, поступающих через MIDI.

Сигнал ALL SOUNDS OFF, принятый через MIDI, стирает звуки в заданных каналах, которые воспроизводятся через MIDI.

Выбор банка

Available Bank Select/Program Change

MSB	(16-ричное)	LSB	(16-ричное)	№ программы	Тип	Память	Описание
0	00	0	00	0 – 127	Normal Voice	GM Voice	
127	7F	0	00	0	Drum Voice	GM Drum	
63	3F	0	00	0 – 127	Normal Voice	Preset 1	
		1	01	0 – 127		Preset 2	
		2	02	0 – 127		Preset 3	
		3	03	0 – 127		Preset 4	
		8	08	0 – 127		User 1	
		9	09	0 – 127		User 2	
		32	20	0 – 63	Drum Voice	Preset	
		40	28	0 – 31		User	
		60	3C	0 – 15	Mixing Voice	User	Может выбираться в режиме Song / Pattern.
63	3F	64	40	0 – 127	Performance	User 1 (Internal)	
		65	41	0 – 127	Performance	User 2 (Internal)	

В зависимости от установленной вставной панели.

Если после включения какого-либо из режимов принимается только сообщение Program Change, вызывается соответствующий выбранным Типу и Памяти голос.
Параметр Master number и режим Voice / Performance / Song / Pattern могут изменяться только с помощью сообщений об изменениях параметров Parameter Change.
Режим Song / Pattern можно переключить путем выбора песен (Song: F3, 00-F3, 3F / Pattern: F3, 00-F3, 3F).
В режиме Performance параметр Part Voice изменить с помощью сообщений Program Change невозможно.

Блок параметров	Старший адрес			Описание
	H	M	L	
SYSTEM	00	00	00	System
	00	20	00	Master EQ for Voice
	00	21	00	Master Effect for Voice
	00	22	00	Master Effect Knob Setting
MODE CHANGE	0A	00	00	Mode Change
BULK CONTROL	0E	00	00	Header
	0F	00	00	Footer
MULTIPLE BULK CONTROL	10	00	00	Header
	11	00	00	Footer
MASTER KEYBOARD	33	00	00	Common
	32	00	00	Zone 1
				:
	32	03	00	Zone 4
PERFORMANCE COMMON	30	00	00	Performance Common
PERFORMANCE PART	31	00	00	Part 1
				:
	31	03	00	Part 4
NORMAL VOICE COMMON	40	00	00	Common 1
	40	00	40	Common 2
	40	01	00	Reverb
	40	02	00	Chorus
	40	03	00	Insertion A
	40	04	00	Insertion B
	40	05	00	Controller
	40	06	00	LFO
	40	70	00	Extra
NORMAL VOICE ELEMENT GROUP 1	41	ee	00	ee: Element No.
NORMAL VOICE ELEMENT GROUP 2	42	ee	00	ee: Element No.
NORMAL VOICE ELEMENT GROUP 3	43	ee	00	ee: Element No.
NORMAL VOICE ELEMENT GROUP 4	44	ee	00	ee: Element No.
DRUM COMMON	46	00	00	Common 1
	46	00	40	Common 2
	46	01	00	Reverb
	46	02	00	Chorus
	46	03	00	Insertion A
	46	04	00	Insertion B
	46	05	00	Controller
	46	70	00	Extra
DRUM ELEMENT GROUP 1	47	ee	00	ee: Element No.
DRUM ELEMENT GROUP 2	48	ee	00	ee: Element No.
DRUM ELEMENT GROUP 3	49	ee	00	ee: Element No.
DRUM ELEMENT GROUP 4	4A	ee	00	ee: Element No.
Mix for Song/Pattern	36	00	00	Multi Common
	37	00	00	Part 1
				:
	37	0F	00	Part 16

Блок пересылки массива данных

«Старший адрес» означает старший адрес каждого блока, предназначенного для пересылки массива данных.

«Счетчик битов» означает объем данных, содержащихся в каждом блоке, предназначенного для пересылки массива данных.

Блоки от заголовка Block Header до примечания Block Footer могут передаваться независимо друг от друга. Они могут приниматься, даже если не все из них переданы. Если в состав блока включен несоответствующий блок, данные не будут приниматься.

Чтобы выполнить запрос пересылки данных 1 Performance / 1 Voice, назначьте их соответствующие адреса заголовков.

Относительно информации о «mm» и «nm», приведенной в следующем перечне, обратитесь к приведенной ниже таблице «ТАБЛИЦА ОБМЕНА ПАРАМЕТРОВ MIDI (УПРАВЛЕНИЕ ПЕРЕСЫЛКОЙ МАССИВОВ ДАННЫХ)».

Блок параметров	Описание	Счетчик битов		Старший адрес		
		Десятичн.	16-ричн.	H	M	L
SYSTEM	System	60	003C	00	00	00
	Master EQ (for Voice Mode)	20	0014	00	20	00
	Master Effect (for Voice Mode)	35	0023	00	21	00
	Master Effect Knob Setting	32	0020	00	22	00
MASTER KEYBOARD	Bulk Header	0	00	0E	mm	nn
	Common	19	0013	33	00	00
	Zone1	16	0010	32	00	00
	:	4 Blocks		:	:	:
	Zone4	16	0010	32	03	00
	Bulk Footer	0	00	0F	mm	nn
PERFORMANCE	Bulk Header	0	00	0E	mm	nn
COMMON	Common	101	0065	30	00	00
	Reverb	36	0024	30	01	00
	Chorus	37	0025	30	02	00
	Master EQ	20	0014	30	10	00
	Master Effect	35	0023	30	11	00
PART	Part 1	58	003A	31	00	00
	:	4 Blocks		:	:	:
	Part 4	58	003A	31	03	00
	Bulk Footer	0	00	0F	mm	nn
VOICE (NORMAL)	Bulk Header	0	00	0E	mm	nn
COMMON	Extra	82	0052	40	70	00
	Common 1	17	0011	40	00	00
	Common 2	4	0004	40	00	40
	Reverb	36	0024	40	01	00
	Chorus	37	0025	40	02	00
	Insertion A	34	0022	40	03	00
	Insertion B	34	0022	40	04	00
	Controller	30	001E	40	05	00
	LFO	38	0026	40	06	00
ELEMENT 1	Oscillator	29	001D	41	00	00
	Amplitude	30	001E	41	00	20
	Pitch	30	001E	42	00	00
	Filter	50	0032	43	00	00
	EQ	8	0008	44	00	00
	LFO 1	8	0008	44	00	40
	LFO 2	4	0004	44	00	50
ELEMENT 2	Oscillator	29	001D	41	01	00
	Amplitude	30	001E	41	01	20
	Pitch	30	001E	42	01	00
	Filter	50	0032	43	01	00
	EQ	8	0008	44	01	00
	LFO1	8	0008	44	01	40
	LFO2	4	0004	44	01	50
ELEMENT 3	Oscillator	29	001D	41	02	00
	Amplitude	30	001E	41	02	20
	Pitch	30	001E	42	02	00
	Filter	50	0032	43	02	00
	EQ	8	0008	44	02	00
	LFO 1	8	0008	44	02	40
	LFO 2	4	0004	44	02	50
ELEMENT 4	Oscillator	29	001D	41	03	00
	Amplitude	30	001E	41	03	20
	Pitch	30	001E	42	03	00
	Filter	50	0032	43	03	00
	EQ	8	0008	44	03	00
	LFO 1	8	0008	44	03	40
	LFO 2	4	0004	44	03	50
	Bulk Footer	0	00	0F	mm	nn

Блок параметров	Описание	Счетчик битов		Старший адрес		
		Десятичн.	16-ричн.	H	M	L
VOICE (DRUM)	Bulk Header	0	00	0E	mm	nn
COMMON	Extra	82	0052	46	70	00
	Common 1	8	0008	46	00	00
	Common 2	4	0004	46	00	40
	Reverb	36	0024	46	01	00
	Chorus	37	0025	46	02	00
	Insertion A	34	0022	46	03	00
	Insertion B	34	0022	46	04	00
	Controller	30	001E	46	05	00
KEY C 0	Oscillator	19	0013	47	00	00
	Amplitude	12	000C	47	00	20
	Pitch	3	0003	48	00	00
	Filter	8	0008	49	00	00
	EQ	8	0008	4A	00	00
	:	73 Blocks		:	:	:
KEY C 6	Oscillator	19	0013	47	48	00
	Amplitude	12	000C	47	48	20
	Pitch	3	0003	48	48	00
	Filter	8	0008	49	48	00
	EQ	8	0008	4A	48	00
	Bulk Footer	0	00	0F	mm	nn
MULTI	Bulk Header	0	00	0E	mm	nn
COMMON	Common	101	0065	36	00	00
	Reverb	36	0024	36	01	00
	Chorus	37	0025	36	02	00
	Master EQ	20	0014	36	10	00
	Master Effect	35	0023	36	11	00
PART	Part 1	58	003A	37	00	00
	:	16 Blocks		:	:	:
	Part 16	58	003A	37	0F	00
	Bulk Footer	0	00	0F	mm	nn

ТАБЛИЦА ОБМЕНА ПАРАМЕТРОВ MIDI (Смена режима)

Адрес			Размер	Диапазон значений данных (16-ричн.)	Наименование параметра	Описание	Примечания
0A	00	00	1	00 – 7F	Master Number Select	0 – 127	
		01	1	00 – 04	Mode Change	0: Voice, 1: Performance, 2: Pattern (Multi), 3: Song (Multi), 4: Master	

ТАБЛИЦА ОБМЕНА ПАРАМЕТРОВ MIDI (Управление пересылкой массивов данных)

Адрес			Размер	Диапазон значений данных (16-ричн.)	Наименование параметра	Описание	Примечания
0E	00	nn	1	–	Bulk Header	Normal Voice PRE 1 (nn = 0 – 127)	
	01	nn	1	–		Normal Voice PRE 2 (nn = 0 – 127)	
	02	nn	1	–		Normal Voice PRE 3 (nn = 0 – 127)	
	03	nn	1	–		Normal Voice PRE 4 (nn = 0 – 127)	
	06	nn	1	–		Normal Voice GM (nn = 0)	
	08	nn	1	–		Normal Voice USER 1 (nn = 0 – 127)	
	09	nn	1	–		Normal Voice USER 2 (nn = 0 – 127)	
	0F	nn	1	–		Normal Voice Edit Buffer (nn = 0)	
	20	nn	1	–		Drum Voice PRE (nn = 0 – 63)	
	21	nn	1	–		Drum Voice GM (nn = 0)	
	28	nn	1	–		Drum Voice USER (nn = 0 – 31)	
	2F	nn	1	–		Drum Voice Edit Buffer (nn = 0)	
	40	nn	1	–		Performance USER 1 (nn = 0 – 127)	
	41	nn	1	–		Performance USER 2 (nn = 0 – 127)	
	4F	nn	1	–		Performance Edit Buffer (nn = 0)	
	5F	nn	1	–		Multi Edit Buffer (nn = 0)	
	70	nn	1	–		Master INT (nn = 0 – 127)	
	7F	nn	1	–		Master Edit Buffer (nn = 0)	
0F	00	nn	1	–	Bulk Footer	Normal Voice PRE 1 (nn = 0 – 127)	
	01	nn	1	–		Normal Voice PRE 2 (nn = 0 – 127)	
	02	nn	1	–		Normal Voice PRE 3 (nn = 0 – 127)	
	03	nn	1	–		Normal Voice PRE 4 (nn = 0 – 127)	
	06	nn	1	–		Normal Voice GM (nn = 0)	
	08	nn	1	–		Normal Voice USER 1 (nn = 0 – 127)	
	09	nn	1	–		Normal Voice USER 2 (nn = 0 – 127)	
	0F	nn	1	–		Normal Voice Edit Buffer (nn = 0)	
	20	nn	1	–		Drum Voice PRE (nn = 0 – 63)	
	21	nn	1	–		Drum Voice GM (nn = 0)	
	28	nn	1	–		Drum Voice USER (nn = 0 – 31)	
	2F	nn	1	–		Drum Voice Edit Buffer (nn = 0)	
	40	nn	1	–		Performance USER 1 (nn = 0 – 127)	
	41	nn	1	–		Performance USER 2 (nn = 0 – 127)	
	4F	nn	1	–		Performance Edit Buffer (nn = 0)	
	5F	nn	1	–		Multi Edit Buffer (nn = 0)	
	70	nn	1	–		Master INT (nn = 0 – 127)	
	7F	nn	1	–		Master Edit Buffer (nn = 0)	

ТАБЛИЦА ОБМЕНА ПАРАМЕТРОВ MIDI (Система)

Адрес			Размер	Диапазон значений данных (16-ричн.)	Наименование параметра	Описание	Примечания
00	00	00	1	00 – 7F	Master Volume	0 – 127	MIDI Master Volume
		01	1	28 – 58	Master Note Shift	-24 – +24 [semitones]	
		02	4	00 – 0F 00 – 0F 00 – 0F 00 – 0F	Master Tune	-102.4 – +102.3 [cent] 1st bit 3-0 → bit 15-12 2nd bit 3-0 → bit 11-8 3rd bit 3-0 → bit 7-4 4th bit 3-0 → bit 3-0	MIDI Master Tuning
		06	1	00 – 01	Controller Reset	hold, reset	
		07	1	35 – 4B	Master Transpose	-11 – +11 (semitones)	
		08	1	3D – 43	Master Octave Shift	-3 – +3	
		09	1	00 – 01	Local Switch	off, on	
		0A	1	00 – 10, 7F	Basic Receive Channel	1 – 16, omni, off	
		0B	1	00 – 0F, 7F	Keyboard Transmit Channel	1 – 16, off	
		0C	1		reserved		
		0D	1	00 – 01	REC ARP Switch	off, on	
		0E	1	00 – 01	STEREO L&R OUTPUT GAIN	00: 0dB, 01: +6dB	
		0F	1		reserved		
		10	1		reserved		
		11	1	00 – 03	BC Curve (for TG)	thru, soft, hard, wide	
		12	1	00 – 04	Keyboard Velocity Curve	norm, soft, hard, wide, fixed	
		13	1	01 – 7F	Keyboard Fixed Velocity	1 – 127	
		14	1		reserved		
		15	1	00 – 01	Receive/Transmit Bank Select	off, on	
		16	1	00 – 01	Receive/Transmit Program Change	off, on	
		17	1	00 – 01	MIDI Control Mode	mode1, mode2	
		18	1	00 – 07	Thru Port for USB	1 – 8	
		19	1	00 – 01	MIDI IN/OUT	MIDI, USB	
		1A	1	00 – 03	Effect Bypass for System Effect	bit 0: Reverb, bit 1: Chorus	
		1B	1		reserved		
		1C	1	00 – 01	Effect Bypass for Insertion Effect	bit0: Internal	
		1D	1		reserved		
		1E	1	00 – 01	AutoLoad Switch	off, on	
		1F	1	00 – 05	Power on Mode	Performance, Voice (INT), Voice (PRE 1), GM, last, Master	
		20	1	00 – 0A	Bulk Interval	0 – 10ms	
		21	1		reserved		
		22	1		reserved		
		23	1		reserved		
		24	1		reserved		
		25	1		reserved		
		26	1		reserved		
		27	1		reserved		
		28	1		reserved		
		29	1		reserved		
		2A	1	00 – 55	Assign A Destination	off, 1 – 85	
		2B	1	00 – 55	Assign B Destination	off, 1 – 85	
		2C	1		reserved		
		2D	1	00 – 5F	Assign A Control Number	off, 1 – 95	
		2E	1	00 – 5F	Assign B Control Number	off, 1 – 95	
		2F	1		reserved		
		30	1	00 – 5F	RB Control Number	off, 1 – 95	for Voice Mode
		31	1	00 – 65	FS Assign	off, 1 – 95, ArpSw, ArpHold, Play/Stop, PCInc, PCDec, OctaveReset	
		32	1	00 – 5F	ARP Switch Control Number	off,1 – 95	
		33	1	00 – 5F	ARP Hold Control Number	off,1 – 95	
		34	1	00 – 01	ARP MIDI Out Switch	off, on	for Voice Mode
		35	1	00 – 0F	ARP MIDI Out Channel	1 – 16	:
		36	1	00 – 5F	Assign1 Control Number	off, 1 – 95	:
		37	1	00 – 5F	Assign2 Control Number	off, 1 – 95	:
		38	1	00 – 5F	BC Control Number	off, 1 – 95	:
		39	1	00 – 5F	FC2 Control Number	off, 1 – 95	:
		3A	1	00 – 5F	FC1 Control Number	off, 1 – 95	
		3B	1		reserved		

TOTAL SIZE = 60 3C (HEX)

Адрес			Размер	Диапазон значений данных (16-ричн.)	Наименование параметра	Описание	Примечания
00	20	00	1	34 –4C	EQ Gain 1	-12 – +12[dB]	for Voice Mode
		01	1	04 – 28	EQ Frequency 1	32 – 2000[Hz]	:
		02	1	01 – 78	EQ Q1	0.1 – 12.0	:
		03	1	00 – 01	EQ Shape 1	shelv, peak	:
		04	1	34 – 4C	EQ Gain 2	-12 – +12[dB]	:
		05	1	0E – 36	EQ Frequency 2	100 – 10.0[kHz]	:
		06	1	01 – 78	EQ Q2	0.1 – 12.0	:
			1	01	reserved		:
		08	1	34 – 4C	EQ Gain 3	-12 – +12 [dB]	:

Адрес			Размер	Диапазон значений данных (16-ричн.)	Наименование параметра	Описание	Примечания
		09	1	0E – 36	EQ Frequency 3	100 – 10.0 [kHz]	:
		0A	1	01 – 78	EQ Q3	0.1 – 12.0	:
			1		reserved		:
		0C	1	34 – 4C	EQ Gain 4	-12 – +12 [dB]	:
		0D	1	0E – 36	EQ Frequency 4	100 – 10.0 [kHz]	:
		0E	1	01 – 78	EQ Q4	0.1 – 12.0	:
			1		reserved		:
		10	1	34 – 4C	EQ Gain 5	-12 – +12 [dB]	:
		11	1	1C – 3A	EQ Frequency 5	0.5 – 16.0 [kHz]	:
		12	1	01 – 78	EQ Q5	0.1 – 12.0	:
		13	1	00 – 01	EQ Shape 5	shelv, peak	:

TOTAL SIZE = 20 14 (HEX)

00	21	00	2	00 – 7F 00 – 7F	Master Effect Type MSB Master Effect Type LSB	Refer to "Effect Parameter List."	for Voice Mode
		02	2	00 – 7F 00 – 7F	Master Effect Parameter 1 MSB Master Effect Parameter 1 LSB	:	:
		04	2	00 – 7F 00 – 7F	Master Effect Parameter 2 MSB Master Effect Parameter 2 LSB	:	:
		06	2	00 – 7F 00 – 7F	Master Effect Parameter 3 MSB Master Effect Parameter 3 LSB	:	:
		08	2	00 – 7F 00 – 7F	Master Effect Parameter 4 MSB Master Effect Parameter 4 LSB	:	:
		0A	2	00 – 7F 00 – 7F	Master Effect Parameter 5 MSB Master Effect Parameter 5 LSB	:	:
		0C	2	00 – 7F 00 – 7F	Master Effect Parameter 6 MSB Master Effect Parameter 6 LSB	:	:
		0E	2	00 – 7F 00 – 7F	Master Effect Parameter 7 MSB Master Effect Parameter 7 LSB	:	:
		10	2	00 – 7F 00 – 7F	Master Effect Parameter 8 MSB Master Effect Parameter 8 LSB	:	:
		12	2	00 – 7F 00 – 7F	Master Effect Parameter 9 MSB Master Effect Parameter 9 LSB	:	:
		14	2	00 – 7F 00 – 7F	Master Effect Parameter 10 MSB Master Effect Parameter 10 LSB	:	:
		16	2	00 – 7F 00 – 7F	Master Effect Parameter 11 MSB Master Effect Parameter 11 LSB	:	:
		18	2	00 – 7F 00 – 7F	Master Effect Parameter 12 MSB Master Effect Parameter 12 LSB	:	:
		1A	2	00 – 7F 00 – 7F	Master Effect Parameter 13 MSB Master Effect Parameter 13 LSB	:	:
		1C	2	00 – 7F 00 – 7F	Master Effect Parameter 14 MSB Master Effect Parameter 14 LSB	:	:
		1E	2	00 – 7F 00 – 7F	Master Effect Parameter 15 MSB Master Effect Parameter 15 LSB	:	:
		20	2	00 – 7F 00 – 7F	Master Effect Parameter 16 MSB Master Effect Parameter 16 LSB	:	:
		22	1	00 – 01	Master Effect ON/OFF	0: Off, 1:On	:

TOTAL SIZE = 35 23 (HEX)

00	22	00	1	00 – 0F	Master Effect Type 1 Knob 1 Dest	parameter 1 – 16	
		01	1	00 – 0F	Master Effect Type 1 Knob 2 Dest	:	
		02	1	00 – 0F	Master Effect Type 1 Knob 3 Dest	:	
		03	1	00 – 0F	Master Effect Type 1 Knob 4 Dest	:	
		04	1	00 – 0F	Master Effect Type 2 Knob 1 Dest	:	
		05	1	00 – 0F	Master Effect Type 2 Knob 2 Dest	:	
		06	1	00 – 0F	Master Effect Type 2 Knob 3 Dest	:	
		07	1	00 – 0F	Master Effect Type 2 Knob 4 Dest	:	
		08	1	00 – 0F	Master Effect Type 3 Knob 1 Dest	:	
		09	1	00 – 0F	Master Effect Type 3 Knob 2 Dest	:	
		0A	1	00 – 0F	Master Effect Type 3 Knob 3 Dest	:	
		0B	1	00 – 0F	Master Effect Type 3 Knob 4 Dest	:	
		0C	1	00 – 0F	Master Effect Type 4 Knob 1 Dest	:	
		0D	1	00 – 0F	Master Effect Type 4 Knob 2 Dest	:	
		0E	1	00 – 0F	Master Effect Type 4 Knob 3 Dest	:	
		0F	1	00 – 0F	Master Effect Type 4 Knob 4 Dest	:	
		10	1	00 – 0F	Master Effect Type 5 Knob 1 Dest	:	
		11	1	00 – 0F	Master Effect Type 5 Knob 2 Dest	:	
		12	1	00 – 0F	Master Effect Type 5 Knob 3 Dest	:	
		13	1	00 – 0F	Master Effect Type 5 Knob 4 Dest	:	
		14	1	00 – 0F	Master Effect Type 6 Knob 1 Dest	:	
		15	1	00 – 0F	Master Effect Type 6 Knob 2 Dest	:	
		16	1	00 – 0F	Master Effect Type 6 Knob 3 Dest	:	
		17	1	00 – 0F	Master Effect Type 6 Knob 4 Dest	:	
		18	1	00 – 0F	Master Effect Type 7 Knob 1 Dest	:	
		19	1	00 – 0F	Master Effect Type 7 Knob 2 Dest	:	
		1A	1	00 – 0F	Master Effect Type 7 Knob 3 Dest	:	
		1B	1	00 – 0F	Master Effect Type 7 Knob 4 Dest	:	
		1C	1	00 – 0F	Master Effect Type 8 Knob 1 Dest	:	
		1D	1	00 – 0F	Master Effect Type 8 Knob 2 Dest	:	
		1E	1	00 – 0F	Master Effect Type 8 Knob 3 Dest	:	
		1F	1	00 – 0F	Master Effect Type 8 Knob 4 Dest	:	

TOTAL SIZE = 32 20 (HEX)

ТАБЛИЦА ОБМЕНА ПАРАМЕТРОВ MIDI (MASTER)

Адрес			Размер	Диапазон значений данных (16-ричн.)	Наименование параметра	Описание	Примечания
33	00	00	1	20 – 7E	Master Name 1	32 – 126 (ASCII)	
33	00	01	1	20 – 7E	Master Name 2	32 – 126 (ASCII)	
33	00	02	1	20 – 7E	Master Name 3	32 – 126 (ASCII)	
33	00	03	1	20 – 7E	Master Name 4	32 – 126 (ASCII)	
33	00	04	1	20 – 7E	Master Name 5	32 – 126 (ASCII)	
33	00	05	1	20 – 7E	Master Name 6	32 – 126 (ASCII)	
33	00	06	1	20 – 7E	Master Name 7	32 – 126 (ASCII)	
33	00	07	1	20 – 7E	Master Name 8	32 – 126 (ASCII)	
33	00	08	1	20 – 7E	Master Name 9	32 – 126 (ASCII)	
33	00	09	1	20 – 7E	Master Name 10	32 – 126 (ASCII)	
33	00	0A	1		reserved		
33	00	0B	1		reserved		
33	00	0C	1		reserved		
33	00	0D	1	00 – 03	Mode Change	0 = Voice, 1 = Performance, 2 = Pattern, 3 = Song	
33	00	0E	1	00 – 7F	Bank MSB for Voice/Perf Mode	0 – 127	
33	00	0F	1	00 – 7F	Bank LSB for Voice/Perf Mode	0 – 127	
33	00	10	1	00 – 7F	Program Number	1 – 128	
33	00	11	1	00 – 01	Zone on/off	off, on	
33	00	12	1	00 – 06	Knob/Slider Function Select	0 = Pan&Send, 1 = Tone, 2 = Assign, 3 = MeqOffset/PartEQ, 4 = MasterEffect, 5 = ARP FX, 6 = Zone	

TOTAL SIZE = 19 13 (HEX)

Адрес			Размер	Диапазон значений данных (16-ричн.)	Наименование параметра	Описание	Примечания
32	nn	00	1	00 – 3F	Transmit Channel, MIDI/TG Switch	bit 0-3: Ch1 – 16 bit 4: MIDI off, on bit 5: TG off, on	
32	nn	01	1	3D – 43	Transpose (Octave)	-3 – +3	
32	nn	02	1	35 – 4B	Transpose (Semitone)	-11 – +11 (semitones)	
32	nn	03	1	00 – 7F	Note Limit Low	C-2 – G8	
32	nn	04	1	00 – 7F	Note Limit High	C-2 – G8	
32	nn	05	1	00 – 03	Transmit Bank Select for TG Transmit Program Change for TG	bit 0: off, on Bank Select bit 1: off, on Program Change	
32	nn	06	1		reserved		
32	nn	07	1	00 – 7F	MIDI Volume	0 – 127	
32	nn	08	1	00 – 7F	MIDI Pan	0 – 127	
32	nn	09	1	00 – 7F	MIDI Bank MSB	0 – 127	
32	nn	0A	1	00 – 7F	MIDI Bank LSB	0 – 127	
32	nn	0B	1	00 – 7F	MIDI Program Number	1 – 128	
32	nn	0C	1	00 – 7F	Transmit Volume/Expression Transmit Pan Transmit Bank Select for MIDI Transmit Program Change for MIDI Transmit PB	bit 0: off, on Volume/Expression bit 1: off, on Pan bit 3: off, on Bank Select bit 4: off, on Program Change bit 6: off, on PB	Ctrl#7,11
32	nn	0D	1	00 – 7F	Transmit FS Transmit FC1 Transmit MW Transmit Assignable Slider Transmit Assignable Knob	bit 1: off, on FS bit 2: off, on FC1 bit 4: off, on MW bit 5: off, on Assignable Slider bit 6: off, on Assignable Knob	
32	nn	0E	1	00 – 5F	Control Slider Control Number	off, 1 – 95	
32	nn	0F	1	00 – 5F	Control Knob Control Number	off, 1 – 95	

TOTAL SIZE = 16 10 (HEX)

nn=номер зоны 00-03

ТАБЛИЦА ОБМЕНА ПАРАМЕТРОВ MIDI (Общее исполнение)

Адрес			Размер	Диапазон значений данных (16-ричн.)	Наименование параметра	Описание	Примечания
30	00	00	1	20 – 7E	Performance Name 1	32 – 126 (ASCII)	
		01	1	20 – 7E	Performance Name 2	32 – 126 (ASCII)	
		02	1	20 – 7E	Performance Name 3	32 – 126 (ASCII)	
		03	1	20 – 7E	Performance Name 4	32 – 126 (ASCII)	
		04	1	20 – 7E	Performance Name 5	32 – 126 (ASCII)	
		05	1	20 – 7E	Performance Name 6	32 – 126 (ASCII)	
		06	1	20 – 7E	Performance Name 7	32 – 126 (ASCII)	
		07	1	20 – 7E	Performance Name 8	32 – 126 (ASCII)	
		08	1	20 – 7E	Performance Name 9	32 – 126 (ASCII)	
		09	1	20 – 7E	Performance Name 10	32 – 126 (ASCII)	
		0A	1		reserved		
		0B	1	00 – 10	Layer Channel	BasicCh	
		0C	1	00 – 10	Performance Category (Main)	0 – 16 (-- – Co)	Ap, Kb, Or, Gt, Ba, St, Br, Rp, Ld, Pd, Sc, Cp, Dr, Se, Me, Co
		0D	1	00 – 03	Performance Category (Sub)	0 – 3 (-- – Sub1 – Sub3)	Depends on Main Category.
		0E	1		reserved		
		0F	1		reserved		
		10	1	00 – 10	Layer Channel	BasicCh	
		11	1	00 – 01	ARP MIDI Out Switch	off, on	
		12	1	00 – 10	ARP MIDI Out Channel	1 – 16, kbd-ch	
30	00	13	1		reserved		
		14	2	0000 – 20FF	ARP Type MSB ARP Type LSB	0 – 1786: Preset, 8192 – 8447: User	
		16	1	00 – 01	ARP Switch	off, on	
		17	1	00 – 02	ARP Hold	sync-off, off, on	
		18	1	00 – 06	ARP Unit Multiply	50%, 66%, 75%, 100%, 133%, 150%, 200%	
		19	1	00 – 7F	ARP Note Limit Low	C-2 – G8	
		1A	1	00 – 7F	ARP Note Limit High	C-2 – G8	
		1B	1	01 – 7F	ARP Velocity Limit Low	1 – 127	
		1C	1	01 – 7F	ARP Velocity Limit High	1 – 127	
		1D	1	00 – 04	ARP Key Mode	sort, thru, direct, sort+direct, thru+direct	
		1E	1	00 – 01	ARP Vel Mode	original, thru	
		1F	1	00 – 01	ARP Change Timing	realtime, measure	
		20	1	00 – 06	ARP Quantize Value	32th, 16th Triplet, 16th, 8th Triplet, 8th, 4th Triplet, 4th	
		21	1	00 – 64	ARP Quantize Strength	0 – 100%	
		22	2	0000 – 00C8	ARP Velocity Rate MSB ARP Velocity Rate LSB	0 – 200%	
		24	2	0000 – 00C8	ARP Gate Time Rate MSB ARP Gate Time Rate LSB	0 – 200%	
		26	2	0008 – 00F8	ARP Swing MSB ARP Swing LSB	-120 – 0 – +120	
		28	2	0001 – 012C	ARP Tempo MSB ARP Tempo LSB	1 – 300	
		2A	2	00 – 7F 00 – 7F	ARP SF1 Assign Type MSB ARP SF1 Assign Type LSB	0 – 1786: Preset, 8192 – 8447: User, 16383: No Type	
		2C	2	00 – 7F 00 – 7F	ARP SF2 Assign Type MSB ARP SF2 Assign Type LSB	0 – 1786: Preset, 8192 – 8447: User, 16383: No Type	
		2E	2	00 – 7F 00 – 7F	ARP SF3 Assign Type MSB ARP SF3 Assign Type LSB	0 – 1786: Preset, 8192 – 8447: User, 16383: No Type	
		30	2	00 – 7F 00 – 7F	ARP SF4 Assign Type MSB ARP SF4 Assign Type LSB	0 – 1786: Preset, 8192 – 8447: User, 16383: No Type	
		32	2	00 – 7F 00 – 7F	ARP SF5 Assign Type MSB ARP SF5 Assign Type LSB	0 – 1786: Preset, 8192 – 8447: User, 16383: No Type	
30	00	34	1	00 – 05	Knob Function Select	0 = Pan&Send, 1 = Tone, 2 = Assign, 3 = MeqOffset, 4 = MasterEffect, 5 = ARP FX	
		35	1	01 – 7F	Pan	L63 – C – R63	
		36	1		reserved		
		37	1	00 – 7F	QED Decay Time	-64 – +63	
		38	1	00 – 7F	QED Sustain Level	-64 – +63	
		39	1	00 – 7F	QED FEG Attack Time	-64 – +63	
		3A	1	00 – 7F	QED FEG Decay Time	-64 – +63	
		3B	1	00 – 7F	QED FEG Release Time	-64 – +63	
		3C	1		reserved		
		3D	1	00 – 7F	QED FEG Depth	-64 – +63	
		3E	1	00 – 7F	Knob A	-64 – +63	
		3F	1	00 – 7F	Knob B	-64 – +63	
		40	1		reserved		
		41	1	00 – 7F	EQ Low Gain	-64 – +63	
		42	1	00 – 7F	EQ Low Mid Gain	-64 – +63	
		43	1	00 – 7F	EQ High Mid Gain	-64 – +63	
		44	1	00 – 7F	EQ High Gain	-64 – +63	

Адрес			Размер	Диапазон значений данных (16-ричн.)	Наименование параметра	Описание	Примечания
		45	1	00 – 7F	Assign 1	-64 – +63	
		46	1	00 – 7F	Assign 2	-64 – +63	
		47	1	00 – 7F	Cutoff Frequency	-64 – +63	
		48	1	00 – 7F	Resonance	-64 – +63	
		49	1	00 – 7F	Attack Time	-64 – +63	
		4A	1	00 – 7F	Release Time	-64 – +63	
		4B	1		reserved		
		4C	1		reserved		
		4D	1		reserved		
		4E	1		reserved		
		4F	1		reserved		
		50	1		reserved		
		51	1		reserved		
30	00	52	1	00 – 7F	Volume	0 – 127	
		53	1	00 – 7F	QED Portamento Time	-64 – +63	
		54	1	00 – 01	QED Portamento Switch	off, on	
		55	1	00 – 7F	Reverb Send	0 – 127	
		56	1	00 – 7F	Chorus Send	0 – 127	
		57	1		reserved		
		58	1	00 – 5F	Assign 1 Control Number	off, 1 – 95	
		59	1	00 – 5F	Assign 2 Control Number	off, 1 – 95	
		5A	1	00 – 5F	BC Control Number	off, 1 – 95	
		5B	1	00 – 5F	FC2 Control Number	off, 1 – 95	
		5C	1	00 – 5F	FC1 Control Number	off, 1 – 95	
		5D	1		reserved		
		5E	1	00 – 5F	RB Control Number	off,1 – 95	
		5F	1		reserved		
		60	4	00	Insertion Part Sw	reserved	Up to three parts can be turned on simultaneously.
				00	--	reserved	
				00	--	reserved	
				00 – 0F		bit 0: off, on Part1 bit 1: off, on Part2 bit 2: off, on Part3 bit 3: off, on Part4 bit 4: reserved bit 5: reserved bit 6: reserved	
		64	1	00	--	reserved	

TOTAL SIZE = 101 65 (HEX)

30	01	00	2	00 – 7F 00 – 7F	Reverb Type MSB Reverb Type LSB	Refer to "Effect Parameter List."	
		02	2	00 – 7F 00 – 7F	Reverb Parameter 1 MSB Reverb Parameter 1 LSB	:	
		04	2	00 – 7F 00 – 7F	Reverb Parameter 2 MSB Reverb Parameter 2 LSB	:	
		06	2	00 – 7F 00 – 7F	Reverb Parameter 3 MSB Reverb Parameter 3 LSB	:	
		08	2	00 – 7F 00 – 7F	Reverb Parameter 4 MSB Reverb Parameter 4 LSB	:	
		0A	2	00 – 7F 00 – 7F	Reverb Parameter 5 MSB Reverb Parameter 5 LSB	:	
		0C	2	00 – 7F 00 – 7F	Reverb Parameter 6 MSB Reverb Parameter 6 LSB	:	
		0E	2	00 – 7F 00 – 7F	Reverb Parameter 7 MSB Reverb Parameter 7 LSB	:	
		10	2	00 – 7F 00 – 7F	Reverb Parameter 8 MSB Reverb Parameter 8 LSB	:	
		12	2	00 – 7F 00 – 7F	Reverb Parameter 9 MSB Reverb Parameter 9 LSB	:	
		14	2	00 – 7F 00 – 7F	Reverb Parameter 10 MSB Reverb Parameter 10 LSB	:	
		16	2	00 – 7F 00 – 7F	Reverb Parameter 11 MSB Reverb Parameter 11 LSB	:	
		18	2	00 – 7F 00 – 7F	Reverb Parameter 12 MSB Reverb Parameter 12 LSB	:	
		1A	2	00 – 7F 00 – 7F	Reverb Parameter 13 MSB Reverb Parameter 13 LSB	:	
		1C	2	00 – 7F 00 – 7F	Reverb Parameter 14 MSB Reverb Parameter 14 LSB	:	
		1E	2	00 – 7F 00 – 7F	Reverb Parameter 15 MSB Reverb Parameter 15 LSB	:	
		20	2	00 – 7F 00 – 7F	Reverb Parameter 16 MSB Reverb Parameter 16 LSB	:	
30	01	22	1	00 – 7F	Reverb Return	-∞dB – 0dB – +6dB (0 – 96 – 127)	
30	01	23	1	01 – 7F	Reverb Pan	L63 – C – R63	

TOTAL SIZE = 36 24 (HEX)

Адрес			Размер	Диапазон значений данных (16-ричн.)	Наименование параметра	Описание	Примечания
30	02	00	2	00 – 7F 00 – 7F	Chorus Type MSB Chorus Type LSB	Refer to “Effect Parameter List.”	
		02	2	00 – 7F 00 – 7F	Chorus Parameter 1 MSB Chorus Parameter 1 LSB	:	
		04	2	00 – 7F 00 – 7F	Chorus Parameter 2 MSB Chorus Parameter 2 LSB	:	
		06	2	00 – 7F 00 – 7F	Chorus Parameter 3 MSB Chorus Parameter 3 LSB	:	
		08	2	00 – 7F 00 – 7F	Chorus Parameter 4 MSB Chorus Parameter 4 LSB	:	
		0A	2	00 – 7F 00 – 7F	Chorus Parameter 5 MSB Chorus Parameter 5 LSB	:	
		0C	2	00 – 7F 00 – 7F	Chorus Parameter 6 MSB Chorus Parameter 6 LSB	:	
		0E	2	00 – 7F 00 – 7F	Chorus Parameter 7 MSB Chorus Parameter 7 LSB	:	
		10	2	00 – 7F 00 – 7F	Chorus Parameter 8 MSB Chorus Parameter 8 LSB	:	
		12	2	00 – 7F 00 – 7F	Chorus Parameter 9 MSB Chorus Parameter 9 LSB	:	
		14	2	00 – 7F 00 – 7F	Chorus Parameter 10 MSB Chorus Parameter 10 LSB	:	
		16	2	00 – 7F 00 – 7F	Chorus Parameter 11 MSB Chorus Parameter 11 LSB	:	
		18	2	00 – 7F 00 – 7F	Chorus Parameter 12 MSB Chorus Parameter 12 LSB	:	
		1A	2	00 – 7F 00 – 7F	Chorus Parameter 13 MSB Chorus Parameter 13 LSB	:	
		1C	2	00 – 7F 00 – 7F	Chorus Parameter 14 MSB Chorus Parameter 14 LSB	:	
		1E	2	00 – 7F 00 – 7F	Chorus Parameter 15 MSB Chorus Parameter 15 LSB	:	
		20	2	00 – 7F 00 – 7F	Chorus Parameter 16 MSB Chorus Parameter 16 LSB	:	
		22	1	00 – 7F	Chorus Return	-∞dB – 0dB – +6dB (0 – 96 – 127)	
		23	1	01 – 7F	Chorus Pan	L63 – C – R63	
		24	1	00 – 7F	Send Chorus To Reverb	-∞dB – 0dB (0 – 127)	

TOTAL SIZE = 37 25 (HEX)

30	10	00	1	34 – 4C	EQ Gain 1	-12 – +12 [dB]	
		01	1	04 – 28	EQ Frequency 1	32 – 2000 [Hz]	
		02	1	01 – 78	EQ Q1	0.1 – 12.0	
		03	1	00 – 01	EQ Shape 1	shelv, peak	
		04	1	34 – 4C	EQ Gain 2	-12 – +12 [dB]	
		05	1	0E – 36	EQ Frequency 2	100 – 10.0 [kHz]	
		06	1	01 – 78	EQ Q2	0.1 – 12.0	
			1		reserved		
		08	1	34 – 4C	EQ Gain 3	-12 – +12 [dB]	
		09	1	0E – 36	EQ Frequency 3	100 – 10.0 [kHz]	
		0A	1	01 – 78	EQ Q3	0.1 – 12.0	
			1		reserved		
		0C	1	34 – 4C	EQ Gain 4	-12 – +12 [dB]	
		0D	1	0E – 36	EQ Frequency 4	100 – 10.0 [kHz]	
		0E	1	01 – 78	EQ Q4	0.1 – 12.0	
			1		reserved		
		10	1	34 – 4C	EQ Gain 5	-12 – +12 [dB]	
		11	1	1C – 3A	EQ Frequency 5	0.5 – 16.0 [kHz]	
		12	1	01 – 78	EQ Q5	0.1 – 12.0	
		13	1	00 – 01	EQ Shape 5	shelv, peak	

TOTAL SIZE = 20 14 (HEX)

Адрес			Размер	Диапазон значений данных (16-ричн.)	Наименование параметра	Описание	Примечания
30	11	00	2	00 – 7F 00 – 7F	Master Effect Type MSB Master Effect Type LSB	Refer to “Effect Parameter List.”	
		02	2	00 – 7F 00 – 7F	Master Effect Parameter 1 MSB Master Effect Parameter 1 LSB	:	
		04	2	00 – 7F 00 – 7F	Master Effect Parameter 2 MSB Master Effect Parameter 2 LSB	:	
		06	2	00 – 7F 00 – 7F	Master Effect Parameter 3 MSB Master Effect Parameter 3 LSB	:	
		08	2	00 – 7F 00 – 7F	Master Effect Parameter 4 MSB Master Effect Parameter 4 LSB	:	
		0A	2	00 – 7F 00 – 7F	Master Effect Parameter 5 MSB Master Effect Parameter 5 LSB	:	
		0C	2	00 – 7F 00 – 7F	Master Effect Parameter 6 MSB Master Effect Parameter 6 LSB	:	
		0E	2	00 – 7F 00 – 7F	Master Effect Parameter 7 MSB Master Effect Parameter 7 LSB	:	
		10	2	00 – 7F 00 – 7F	Master Effect Parameter 8 MSB Master Effect Parameter 8 LSB	:	
		12	2	00 – 7F 00 – 7F	Master Effect Parameter 9 MSB Master Effect Parameter 9 LSB	:	
		14	2	00 – 7F 00 – 7F	Master Effect Parameter 10 MSB Master Effect Parameter 10 LSB	:	
		16	2	00 – 7F 00 – 7F	Master Effect Parameter 11 MSB Master Effect Parameter 11 LSB	:	
		18	2	00 – 7F 00 – 7F	Master Effect Parameter 12 MSB Master Effect Parameter 12 LSB	:	
		1A	2	00 – 7F 00 – 7F	Master Effect Parameter 13 MSB Master Effect Parameter 13 LSB	:	
		1C	2	00 – 7F 00 – 7F	Master Effect Parameter 14 MSB Master Effect Parameter 14 LSB	:	
		1E	2	00 – 7F 00 – 7F	Master Effect Parameter 15 MSB Master Effect Parameter 15 LSB	:	
		20	2	00 – 7F 00 – 7F	Master Effect Parameter 16 MSB Master Effect Parameter 16 LSB	:	
		22	1	00 – 01	Master Effect ON/OFF	0: OFF, 1: ON	

TOTAL SIZE = 35 23 (HEX)

ТАБЛИЦА ОБМЕНА ПАРАМЕТРОВ MIDI (Партия исполнения)

Адрес			Размер	Диапазон значений данных (16-ричн.)	Наименование параметра	Описание	Примечания
31	pp	00	1	00 – 7F	Bank Select MSB	0 – 127	
		01	1	00 – 7F	Bank Select LSB	0 – 127	
		02	1	00 – 7F	Program Number	1 – 128	
		03	1		reserved		
		04	1	00 – 01	Part Mode	mono, poly	
		05	1	01 – 7F	Velocity Limit Low	1 – 127	
		06	1	01 – 7F	Velocity Limit High	1 – 127	
		07	1	00 – 7F	Note Limit Low	C-2 – G8	
		08	1	00 – 7F	Note Limit High	C-2 – G8	
		09	1	10 – 58	Pitch Bend Range Upper	-48 – +24 (PB Part: -24 – +24)	
		0A	1	10 – 58	Pitch Bend Range Lower	-48 – +24	
		0B	1	00 – 7F	Velocity Sense Depth	0 – 127	
		0C	1	00 – 7F	Velocity Send Offset	0 – 127	
		0D	1	00 – 7F	Volume	0 – 127	
		0E	1	01 – 7F	Pan	L63 – C – R63	
		0F	1		reserved		
		10	2	00 – 0F 00 – 0F	Detune MSB Detune LSB	-12.8 – +12.7 [Hz] 1st bit 3-0 → bit 7-4 2nd bit 3-0 → bit 3-0	
		12	1	00 – 7F	Reverb Send	0 – 127	
		13	1	00 – 7F	Chorus Send	0 – 127	
		14	1	00 – 7F	reserved		
		15	1	00 – 7F	Dry Level	0 – 127	
		16	1	28 – 58	Note Shift	-24 – +24 [semitones]	
		17	1	00 – 7F	Filter Cutoff Frequency	-64 – +63	
		18	1	00 – 7F	Filter Resonance/Width	-64 – +63	
		19	1		reserved		
		1A	1	00 – 01	Portamento Switch	off, on	
		1B	1	00 – 7F	Portamento Time	0 – 127	
		1C	1	00 – 01	Portamento Mode	fingered, fulltime	
		1D	1		reserved		
		1E	1		reserved		
31	pp	1F	1	00 – 7F	Layer Sw Arpeggio Sw Receive Control Change Receive AT Receive PB	bit0: Layer Sw off, on bit1: Arpeggio Sw off, on bit2: off, on Control Change bit3: reserved bit4: reserved bit5: off, on AT bit6: off, on PB	Part 1: on, Other: off Part 1: on, Other: off
		20	1	00 – 7F	Receive Volume/Expression Receive Sustain/Sostenuto Receive MW	bit0: off, on Expression bit1: reserved bit2: reserved bit3: off, on Sustain/ Sostenuto bit4: reserved bit5: off, on MW bit6: reserved	
		21	1	00 – 7F	Receive FC2 Receive FS Receive FC1 Receive BC Receive Knob 1 Receive Knob 2 Receive RB	bit0: off, on FC2 bit1: off, on FS bit2: off, on FC1 bit3: off, on BC bit4: off, on KN1 bit5: off, on KN2 bit6: off, on RB	
31	pp	22	1	00 – 7F	AEG Decay 2 Level (EG Sustain Level)	-64 – +63	
		23	1	00 – 7F	AEG Attack Time (EG Attack Time)	-64 – +63	
		24	1	00 – 01	Voice Pan on/off	off, on	
		25	1	00 – 7F	AEG Decay 2 Time (EG Decay Time)	-64 – +63	
		26	1	00 – 7F	AEG Release Time (EG Release Time)	-64 – +63	
		27	1	00 – 7F	FEG Decay 2 Level (EG Sustain Level)	-64 – +63	
		28	1	00 – 7F	FEG Attack Time (EG Attack Time)	-64 – +63	
		29	1		reserved		
		2A	1	00 – 7F	FEG Decay 2 Time (EG Decay Time)	-64 – +63	
		2B	1	00 – 7F	FEG Release Time (EG Release Time)	-64 – +63	
		2C	1	00 – 7F	FEG DEPTH	-64 – +63	
31	pp	2D	1	00	reserved		
		2E	2	002E – 00B6	Low Frequency MSB Low Frequency LSB	50.1 – 2.00k	
		30	1	20 – 60	Low Gain	-32 – +32	
		31	1	00	reserved		
		32	2	0053 – 00F1	Mid Frequency MSB Mid Frequency LSB	139.7 – 10.1k	
		34	1	20 – 60	Mid Gain	-32 – +32	
		35	1	00 – 1F	Mid Resonance	0 – 31	
		36	2	0083 – 00FF	High Frequency MSB High Frequency LSB	503.8 – 14k	
		38	1	20 – 60	High Gain	-32 – +32	
		39	1	00	reserved		

TOTAL SIZE = 58 3 (HEX)
pp = номер партии 00 – 03

00 – 03 Part 1 – 4 (Normal, Drum)

ТАБЛИЦА ОБМЕНА ПАРАМЕТРОВ MIDI (Общий блок обычного голоса)

Адрес			Размер	Диапазон значений данных (16-ричн.)	Наименование параметра	Описание	Примечания
40	70	00	1	20 – 7E	Voice Name 1	32 – 126 (ASCII)	
		01	1	20 – 7E	Voice Name 2	32 – 126 (ASCII)	
		02	1	20 – 7E	Voice Name 3	32 – 126 (ASCII)	
		03	1	20 – 7E	Voice Name 4	32 – 126 (ASCII)	
		04	1	20 – 7E	Voice Name 5	32 – 126 (ASCII)	
		05	1	20 – 7E	Voice Name 6	32 – 126 (ASCII)	
		06	1	20 – 7E	Voice Name 7	32 – 126 (ASCII)	
		07	1	20 – 7E	Voice Name 8	32 – 126 (ASCII)	
		08	1	20 – 7E	Voice Name 9	32 – 126 (ASCII)	
		09	1	20 – 7E	Voice Name 10	32 – 126 (ASCII)	
		0A	1		reserved		
		0B	1		reserved		
		0C	1	00 – 10	Voice Category (Main)	0 – 16 (-- – Co)	Ap, Kb, Or, Gt, Ba, St, Br, Rp, Ld, Pd, Sc, Cp, Dr, Se, Me, Co
		0D	1	00 – 03	Voice Category (Sub)	0 – 3 (-- – Sub1 – Sub3)	Refer to "Category List."
		0E	1		reserved		
		0F	1		reserved		
		10	1		reserved		
		11	1		reserved		
		12	1		reserved		
40	70	13	1		reserved		
		14	2	0000 – 20FF	ARP Type MSB ARP Type LSB	0 – 1786: Preset, 8192-8447: User	
		16	1	00 – 01	ARP Switch	off, on	
		17	1	00 – 02	ARP Hold	sync-off, off, on	
		18	1	00 – 06	ARP Unit Multiply	50%, 66%, 75%, 100%, 133%, 150%, 200%	
		19	1	00 – 7F	ARP Note Limit Low	C-2 – G8	
		1A	1	00 – 7F	ARP Note Limit High	C-2 – G8	
		1B	1	01 – 7F	ARP Velocity Limit Low	1 – 127	
		1C	1	01 – 7F	ARP Velocity Limit High	1 – 127	
		1D	1	00 – 04	ARP Key Mode	sort, thru, direct, sort+direct, thru+direct	
		1E	1	00 – 01	ARP Vel Mode	original, thru	
		1F	1	00 – 01	ARP Change Timing	realtime, measure	
		20	1	00 – 06	ARP Quantize Value	32th,16th Triplet, 16th, 8th Triplet, 8th, 4th Triplet, 4th	
		21	1	00 – 64	ARP Quantize Strength	0 – 100%	
		22	2	0000 – 00C8	ARP Velocity Rate MSB ARP Velocity Rate LSB	0 – 200%	
		24	2	0000 – 00C8	ARP Gate Time Rate MSB ARP Gate Time Rate LSB	0 – 200%	
		26	2	0008 – 00F8	ARP Swing MSB ARP Swing LSB	-120 – 0 – +120	
		28	2	0001 – 012C	ARP Tempo MSB ARP Tempo LSB	1 – 300	
		2A	2	00 – 7F 00 – 7F	ARP SF1 Assign Type MSB ARP SF1 Assign Type LSB	0 – 1786: Preset, 8192-8447: User, 16383: No Type	
		2C	2	00 – 7F 00 – 7F	ARP SF2 Assign Type MSB ARP SF2 Assign Type LSB	0 – 1786: Preset, 8192-8447: User, 16383: No Type	
		2E	2	00 – 7F 00 – 7F	ARP SF3 Assign Type MSB ARP SF3 Assign Type LSB	0 – 1786: Preset, 8192-8447: User, 16383: No Type	
		30	2	00 – 7F 00 – 7F	ARP SF4 Assign Type MSB ARP SF4 Assign Type LSB	0 – 1786: Preset, 8192-8447: User, 16383: No Type	
		32	2	00 – 7F 00 – 7F	ARP SF5 Assign Type MSB ARP SF5 Assign Type LSB	0 – 1786: Preset, 8192-8447: User, 16383: No Type	
40	70	34	1	00 – 05	Knob Function Select	0 = Pan&Send, 1 = Tone, 2 = Assign, 3 = MeqOffset, 4 = MasterEffect, 5 = ARP FX	
		35	1	01 – 7F	Pan	L63 – C – R63	
		36	1		reserved		
		37	1	00 – 7F	QED Decay Time	-64 – +63	
		38	1	00 – 7F	QED Sustain Level	-64 – +63	
		39	1	00 – 7F	QED FEG Attack Time	-64 – +63	
		3A	1	00 – 7F	QED FEG Decay Time	-64 – +63	
		3B	1	00 – 7F	QED FEG Release Time	-64 – +63	
		3C	1		reserved		
		3D	1	00 – 7F	QED FEG Depth	-64 – +63	
		3E	1	00 – 7F	Knob A	-64 – +63	
		3F	1	00 – 7F	Knob B	-64 – +63	
		40	1		reserved		
		41	1	00 – 7F	EQ Low Gain	-64 – +63	
		42	1	00 – 7F	EQ Low Mid Gain	-64 – +63	
		43	1	00 – 7F	EQ High Mid Gain	-64 – +63	
		44	1	00 – 7F	EQ High Gain	-64 – +63	
		45	1	00 – 7F	Assign 1	-64 – +63	

Адрес			Размер	Диапазон значений данных (16-ричн.)	Наименование параметра	Описание	Примечания
		46	1	00 – 7F	Assign 2	-64 – +63	
		47	1	00 – 7F	Cutoff Frequency	-64 – +63	
		48	1	00 – 7F	Resonance	-64 – +63	
		49	1	00 – 7F	Attack Time	-64 – +63	
		4A	1	00 – 7F	Release Time	-64 – +63	
		4B	1		reserved		
		4C	1		reserved		
		4D	1		reserved		
		4E	1		reserved		
		4F	1		reserved		
		50	1		reserved		
		51	1		reserved		

TOTAL SIZE = 82 52 (HEX)

40	00	00	1		reserved		
		01	1	00 – 7F	Volume	0 – 127	
		02	1	00 – 01	Same Note Number Key On Assign	single, multi	
		03	1	00 – 01	QED Mono/Poly Mode	mono, poly	
		04	1	00 – 0C	Micro Tuning Scale	Equal, PureMajor, PureMinor, Werckmeist, Kirnberger, Vallot&Yng, 1/4 Shift, 1/4 Tone, 1/8 Tone, Indian, Arabic 1, Arabic 2, Arabic 3	
		05	1	10 – 58	QED Pitch Bend Range Upper	-48 – +24 [semitones]	
		06	1	10 – 58	QED Pitch Bend Range Lower	-48 – +24 [semitones]	
		07	1	00 – 01	QED Portamento Mode	fingered, fulltime	
		08	1	00 – 01	QED Portamento Switch	off, on	
		09	1	00 – 7F	QED Portamento Time	0 – 127	
		0A	1	00 – 03	Portamento Time Mode	rate1, time1, rate2, time2	
		0B	1	00 – 7F	Reverb Send	-∞dB – 0dB	
		0C	1	00 – 7F	Chorus Send	-∞dB – 0dB	
		0D	1		reserved		
		0E	1		reserved		
		0F	1	00 – 0B	Micro Tuning Root	C – B	
		10	1	00 – 07	Legato Slope	0 – 7	

TOTAL SIZE = 17 11 (HEX)

40	00	40	1	00 – 02	Insertion Connect Type	Para, A->B, B->A	
		41	1		reserved		
		42	1		reserved		
		43	1		reserved		

TOTAL SIZE = 4 04 (HEX)

40	01	00	2	00 – 7F 00 – 7F	Reverb Type MSB Reverb Type LSB	Refer to “Effect Parameter List.”	
		02	2	00 – 7F 00 – 7F	Reverb Parameter 1 MSB Reverb Parameter 1 LSB	:	
		04	2	00 – 7F 00 – 7F	Reverb Parameter 2 MSB Reverb Parameter 2 LSB	:	
		06	2	00 – 7F 00 – 7F	Reverb Parameter 3 MSB Reverb Parameter 3 LSB	:	
		08	2	00 – 7F	Reverb Parameter 4 MSB Reverb Parameter 4 LSB	:	
		0A	2	00 – 7F 00 – 7F	Reverb Parameter 5 MSB Reverb Parameter 5 LSB	:	
		0C	2	00 – 7F 00 – 7F	Reverb Parameter 6 MSB Reverb Parameter 6 LSB	:	
		0E	2	00 – 7F 00 – 7F	Reverb Parameter 7 MSB Reverb Parameter 7 LSB	:	
		10	2	00 – 7F 00 – 7F	Reverb Parameter 8 MSB Reverb Parameter 8 LSB	:	
		12	2	00 – 7F 00 – 7F	Reverb Parameter 9 MSB Reverb Parameter 9 LSB	:	
		14	2	00 – 7F 00 – 7F	Reverb Parameter 10 MSB Reverb Parameter 10 LSB	:	
		16	2	00 – 7F 00 – 7F	Reverb Parameter 11 MSB Reverb Parameter 11 LSB	:	
		18	2	00 – 7F 00 – 7F	Reverb Parameter 12 MSB Reverb Parameter 12 LSB	:	
		1A	2	00 – 7F 00 – 7F	Reverb Parameter 13 MSB Reverb Parameter 13 LSB	:	
		1C	2	00 – 7F 00 – 7F	Reverb Parameter 14 MSB Reverb Parameter 14 LSB	:	
		1E	2	00 – 7F 00 – 7F	Reverb Parameter 15 MSB Reverb Parameter 15 LSB	:	
		20	2	00 – 7F 00 – 7F	Reverb Parameter 16 MSB Reverb Parameter 16 LSB	:	
		22	1	00 – 7F	Reverb Return	-∞dB – 0dB – +6dB (0 – 96 – 127)	
		23	1	01 – 7F	Reverb Pan	L63 – C – R63	

TOTAL SIZE = 36 24 (HEX)

pp= номер партии
00 – 03 Part 1 – 4 (Normal, Drum)

Адрес			Размер	Диапазон значений данных (16-ричн.)	Наименование параметра	Описание	Примечания
40	02	00	2	00 – 7F 00 – 7F	Chorus Type MSB Chorus Type LSB	Refer to “Effect Parameter List.”	
		02	2	00 – 7F 00 – 7F	Chorus Parameter 1 MSB Chorus Parameter 1 LSB	:	
		04	2	00 – 7F 00 – 7F	Chorus Parameter 2 MSB Chorus Parameter 2 LSB	:	
		06	2	00 – 7F 00 – 7F	Chorus Parameter 3 MSB Chorus Parameter 3 LSB	:	
		08	2	00 – 7F 00 – 7F	Chorus Parameter 4 MSB Chorus Parameter 4 LSB	:	
		0A	2	00 – 7F 00 – 7F	Chorus Parameter 5 MSB Chorus Parameter 5 LSB	:	
		0C	2	00 – 7F 00 – 7F	Chorus Parameter 6 MSB Chorus Parameter 6 LSB	:	
		0E	2	00 – 7F 00 – 7F	Chorus Parameter 7 MSB Chorus Parameter 7 LSB	:	
		10	2	00 – 7F 00 – 7F	Chorus Parameter 8 MSB Chorus Parameter 8 LSB	:	
		12	2	00 – 7F 00 – 7F	Chorus Parameter 9 MSB Chorus Parameter 9 LSB	:	
		14	2	00 – 7F 00 – 7F	Chorus Parameter 10 MSB Chorus Parameter 10 LSB	:	
		16	2	00 – 7F 00 – 7F	Chorus Parameter 11 MSB Chorus Parameter 11 LSB	:	
		18	2	00 – 7F 00 – 7F	Chorus Parameter 12 MSB Chorus Parameter 12 LSB	:	
		1A	2	00 – 7F 00 – 7F	Chorus Parameter 13 MSB Chorus Parameter 13 LSB	:	
		1C	2	00 – 7F 00 – 7F	Chorus Parameter 14 MSB Chorus Parameter 14 LSB	:	
		1E	2	00 – 7F 00 – 7F	Chorus Parameter 15 MSB Chorus Parameter 15 LSB	:	
		20	2	00 – 7F 00 – 7F	Chorus Parameter 16 MSB Chorus Parameter 16 LSB	:	
		22	1	00 – 7F	Chorus Return	-∞dB – 0dB – +6dB (0 – 96 – 127)	
		23	1	01 – 7F	Chorus Pan	L63 – C – R63	
		24	1	00 – 7F	Send Chorus To Reverb	-∞dB – 0dB (0 – 127)	

TOTAL SIZE = 37 25 (HEX)

Адрес			Размер	Диапазон значений данных (16-ричн.)	Наименование параметра	Описание	Примечания
40	03	00	2	00 – 7F 00 – 7F	Insertion-A Type MSB Insertion-A Type LSB	Refer to “Effect Parameter List.”	
		02	2	00 – 7F 00 – 7F	Insertion-A Parameter 1 MSB Insertion-A Parameter 1 LSB	:	
		04	2	00 – 7F 00 – 7F	Insertion-A Parameter 2 MSB Insertion-A Parameter 2 LSB	:	
		06	2	00 – 7F 00 – 7F	Insertion-A Parameter 3 MSB Insertion-A Parameter 3 LSB	:	
		08	2	00 – 7F 00 – 7F	Insertion-A Parameter 4 MSB Insertion-A Parameter 4 LSB	:	
		0A	2	00 – 7F 00 – 7F	Insertion-A Parameter 5 MSB Insertion-A Parameter 5 LSB	:	
		0C	2	00 – 7F 00 – 7F	Insertion-A Parameter 6 MSB Insertion-A Parameter 6 LSB	:	
		0E	2	00 – 7F 00 – 7F	Insertion-A Parameter 7 MSB Insertion-A Parameter 7 LSB	:	
		10	2	00 – 7F 00 – 7F	Insertion-A Parameter 8 MSB Insertion-A Parameter 8 LSB	:	
		12	2	00 – 7F 00 – 7F	Insertion-A Parameter 9 MSB Insertion-A Parameter 9 LSB	:	
		14	2	00 – 7F 00 – 7F	Insertion-A Parameter 10 MSB Insertion-A Parameter 10 LSB	:	
		16	2	00 – 7F 00 – 7F	Insertion-A Parameter 11 MSB Insertion-A Parameter 11 LSB	:	
		18	2	00 – 7F 00 – 7F	Insertion-A Parameter 12 MSB Insertion-A Parameter 12 LSB	:	
		1A	2	00 – 7F 00 – 7F	Insertion-A Parameter 13 MSB Insertion-A Parameter 13 LSB	:	
		1C	2	00 – 7F 00 – 7F	Insertion-A Parameter 14 MSB Insertion-A Parameter 14 LSB	:	
		1E	2	00 – 7F 00 – 7F	Insertion-A Parameter 15 MSB Insertion-A Parameter 15 LSB	:	
		20	2	00 – 7F 00 – 7F	Insertion-A Parameter 16 MSB Insertion-A Parameter 16 LSB	:	

TOTAL SIZE = 34 22 (HEX)

Адрес			Размер	Диапазон значений данных (16-ричн.)	Наименование параметра	Описание	Примечания
40	04	00	2	00 – 7F 00 – 7F	Insertion-B Type MSB Insertion-B Type LSB	Refer to “Effect Parameter List.”	
		02	2	00 – 7F 00 – 7F	Insertion-B Parameter 1 MSB Insertion-B Parameter 1 LSB	:	
		04	2	00 – 7F 00 – 7F	Insertion-B Parameter 2 MSB Insertion-B Parameter 2 LSB	:	
		06	2	00 – 7F 00 – 7F	Insertion-B Parameter 3 MSB Insertion-B Parameter 3 LSB	:	
		08	2	00 – 7F 00 – 7F	Insertion-B Parameter 4 MSB Insertion-B Parameter 4 LSB	:	
		0A	2	00 – 7F 00 – 7F	Insertion-B Parameter 5 MSB Insertion-B Parameter 5 LSB	:	
		0C	2	00 – 7F 00 – 7F	Insertion-B Parameter 6 MSB Insertion-B Parameter 6 LSB	:	
		0E	2	00 – 7F 00 – 7F	Insertion-B Parameter 7 MSB Insertion-B Parameter 7 LSB	:	
		10	2	00 – 7F 00 – 7F	Insertion-B Parameter 8 MSB Insertion-B Parameter 8 LSB	:	
		12	2	00 – 7F 00 – 7F	Insertion-B Parameter 9 MSB Insertion-B Parameter 9 LSB	:	
		14	2	00 – 7F 00 – 7F	Insertion-B Parameter 10 MSB Insertion-B Parameter 10 LSB	:	
		16	2	00 – 7F 00 – 7F	Insertion-B Parameter 11 MSB Insertion-B Parameter 11 LSB	:	
		18	2	00 – 7F 00 – 7F	Insertion-B Parameter 12 MSB Insertion-B Parameter 12 LSB	:	
		1A	2	00 – 7F 00 – 7F	Insertion-B Parameter 13 MSB Insertion-B Parameter 13 LSB	:	
		1C	2	00 – 7F 00 – 7F	Insertion-B Parameter 14 MSB Insertion-B Parameter 14 LSB	:	
		1E	2	00 – 7F 00 – 7F	Insertion-B Parameter 15 MSB Insertion-B Parameter 15 LSB	:	
		20	2	00 – 7F 00 – 7F	Insertion-B Parameter 16 MSB Insertion-B Parameter 16 LSB	:	

TOTAL SIZE = 34 22 (HEX)

Адрес			Размер	Диапазон значений данных (16-ричн.)	Наименование параметра	Описание	Примечания
40	05	00	1	00 – 0C	Controller Set 1 Source	0: PB, 1: MW, 3: AT, 4: FC, 5: FS, 6: RB, 7: BC, 8: AS1, 9: AS2, 12: FC2	
		01	2	00 00 – 44	Controller Set 1 Destination MSB Controller Set 1 Destination LSB	0 – 68	
		03	1	00 – 7F	Controller Set 1 Depth	-64 – +63	
		04	1		reserved		
		05	1	00 – 0C	Controller Set 2 Source	0: PB, 1: MW, 3: AT, 4: FC, 5: FS, 6: RB, 7: BC, 8: AS1, 9: AS2, 12: FC2	
		06	2	00 00 – 44	Controller Set 2 Destination MSB Controller Set 2 Destination LSB	0 – 68	
		08	1	00 – 7F	Controller Set 2 Depth	-64 – +63	
		09	1		reserved		
		0A	1	00 – 0C	Controller Set 3 Source	0: PB, 1: MW, 3: AT, 4: FC, 5: FS, 6: RB, 7: BC, 8: AS1, 9: AS2, 12: FC2	
		0B	2	00 00 – 44	Controller Set 3 Destination MSB Controller Set 3 Destination LSB	0 – 68	
		0D	1	00 – 7F	Controller Set 3 Depth	-64 – +63	
		0E	1		reserved		
		0F	1	00 – 0C	Controller Set4 Source	0: PB, 1: MW, 3: AT, 4: FC, 5: FS, 6: RB, 7: BC, 8: AS1, 9: AS2, 12: FC2	
		10	2	00 00 – 44	Controller Set 4 Destination MSB Controller Set 4 Destination LSB	0 – 68	
		12	1	00 – 7F	Controller Set 4 Depth	-64 – +63	
		13	1		reserved		
		14	1	00 – 0C	Controller Set 5 Source	0: PB, 1: MW, 3: AT, 4: FC, 5: FS, 6: RB, 7: BC, 8: AS1, 9: AS2, 12: FC2	
		15	2	00 00 – 44	Controller Set 5 Destination MSB Controller Set 5 Destination LSB	0 – 68	
		17	1	00 – 7F	Controller Set 5 Depth	-64 – +63	
		18	1		reserved		
		19	1	00 – 0C	Controller Set 6 Source	0: PB, 1: MW, 3: AT, 4: FC, 5: FS, 6: RB, 7: BC, 8: AS1, 9: AS2, 12: FC2	
		1A	2	00 00 – 44	Controller Set 6 Destination MSB Controller Set 6 Destination LSB	0 – 68	
		1C	1	00 – 7F	Controller Set 6 Depth	-64 – +63	
		1D	1		reserved		

TOTAL SIZE = 30 1E (HEX)

Адрес			Размер	Диапазон значений данных (16-ричн.)	Наименование параметра	Описание	Примечания
40	06	00	1	00 – 05	LFO Phase	0, 90, 120, 180, 240, 270	
		01	1	00 – 0C	LFO Wave	tri, tri+, sawup, sawdwn, squ1/4, squ1/3, squ, squ2/3, squ3/4, trpzd, S/H1, S/H2, user	
		02	1	00 – 3F	LFO Speed	0 – 63 (available only when the Tempo Sync is set to off)	
		03	1	05 – 15	LFO Tempo Speed	5 – 21 (available only when the Tempo Sync is set to on)	16th, 8th/3, 16th., 8th, 4th/3, 8th., 4th, 2th/3, 4th., 2nd, Whole/3, 2nd., 4thX4, 4thX5, 4thX6, 4thX7, 4thX8
		04	1	00 – 01	LFO Tempo Sync	OFF, ON	
		05	1	00 – 7F	LFO Delay Time	0 – 127	
		06	1	00 – 7F	LFO Fade In Time	0 – 127	
		07	1	00 – 7F	LFO Hold Time	0 – 127	
		08	1	00 – 7F	LFO Fade Out Time	0 – 127	
		09	1	00 – 02	LFO Key On Reset	off, each-on, 1st-on	
		0A	1	00 – 05	LFO Box 1 Destination	AMD, PMD, FMD, RESO, PAN, ELEMENT LFO SPEED	
		0B	1	00 – 7F	LFO Box 1 Depth	0 – 127	
		0C	1		reserved		
		0D	1	00 – 05	LFO Box 2 Destination	AMD, PMD, FMD, RESO, PAN, ELEMENT LFO SPEED	
		0E	1	00 – 7F	LFO Box 2 Depth	0 – 127	
		0F	1		reserved		
		10	1	00 – 05	LFO Box 3 Destination	AMD, PMD, FMD, RESO, PAN, ELEMENT LFO SPEED	
		11	1	00 – 7F	LFO Box 3 Depth	0 – 127	
		12	1		reserved		
		13	1	00 – 06	User Wave Total Step	2, 3, 4, 6, 8, 12, 16	
		14	1	00 – 03	User Wave Slope	OFF, UP, DOWN, UP&DOWN	
		15	1	00 – 7F	User Wave Step Value 1	0 – 127	
		16	1	00 – 7F	User Wave Step Value 2	0 – 127	
		17	1	00 – 7F	User Wave Step Value 3	0 – 127	
		18	1	00 – 7F	User Wave Step Value 4	0 – 127	
		19	1	00 – 7F	User Wave Step Value 5	0 – 127	
		1A	1	00 – 7F	User Wave Step Value 6	0 – 127	
		1B	1	00 – 7F	User Wave Step Value 7	0 – 127	
		1C	1	00 – 7F	User Wave Step Value 8	0 – 127	
		1D	1	00 – 7F	User Wave Step Value 9	0 – 127	
		1E	1	00 – 7F	User Wave Step Value 10	0 – 127	
		1F	1	00 – 7F	User Wave Step Value 11	0 – 127	
		20	1	00 – 7F	User Wave Step Value 12	0 – 127	
		21	1	00 – 7F	User Wave Step Value 13	0 – 127	
		22	1	00 – 7F	User Wave Step Value 14	0 – 127	
		23	1	00 – 7F	User Wave Step Value 15	0 – 127	
		24	1	00 – 7F	User Wave Step Value 16	0 – 127	
		25	1	00 – 7F	LFO Random Speed Depth	0 – 127	

TOTAL SIZE = 38 26 (HEX)

ТАБЛИЦА ОБМЕНА ПАРАМЕТРОВ MIDI
(Элементы обычного голоса)

Адрес			Размер	Диапазон значений данных (16-ричн.)	Наименование параметра	Описание	Примечания
41	ee	00	1	00 – 01	Element Assign	0: Off, 1: On	
		01	1	00	Wave Select	0: Preset	
		02	1		reserved		
		03	2	00 – 7F 00 – 7F	Wave Number MSB Wave Number LSB	1 – 1859 1st bit 6-0 → bit 13-7	
		05	1		reserved		
		06	1		reserved		
		07	1		reserved		
		08	1	01 – 7F	Pan	L63 – C – R63	
		09	1	00 – 7F	Random Pan Depth	0 – 127	
		0A	1	00 – 7F	Alternate Pan Depth	L64 – 0 – R63	
		0B	1	00 – 7F	Scaling Pan Depth	-64 – +63	
		0C	1	00 – 7F	Note Limit Low	0 – 127	
		0D	1	00 – 7F	Note Limit High	0 – 127	
		0E	1	01 – 7F	Velocity Limit Low	1 – 127	
		0F	1	01 – 7F	Velocity Limit High	1 – 127	
		10	1	00 – 7F	Velocity Cross Fade	0 – 127	
		11	1	00 – 7F	Key On Delay	0 – 127 (available only when the Tempo Sync is set to off)	
		12	1	00 – 01	Key On Delay Tempo Sync	0: Off, 1: On	
		13	1		reserved		
		14	1		reserved		
		15	1		reserved		
		16	1	00 – 02	Insertion Effect Switch	thru, insA, insB	
		17	1		reserved		
		18	2	00 – 00	Control Box Sw	bit 0 – 6: reserved	
				00 – 3F		bit 0 – 5: Box 1 – Box 6, bit 6: reserved	
		1A	2	00 – 00	LFO Box Sw	bit 0 – 6: reserved	
				00 – 07		bit 0 – 2: Box 1 – Box 3, bit 3 – 6: reserved	
		1C	1	05 – 15	Key On Delay Tempo	5 – 21 (available only when the Tempo Sync is set to on) 16th, 8th/3, 16th., 8th, 4th/3, 8th., 4th, 2th/3, 4th., 2nd, Whole/3, 2nd., 4thX4, 4thX5, 4thX6, 4thX7, 4thX8	

TOTAL SIZE = 29 1D (HEX)

Адрес			Размер	Диапазон значений данных (16-ричн.)	Наименование параметра	Описание	Примечания
41	ee	20	1	00 – 7F	Element Level	0 – 127	
		21	1	00 – 7F	Level Velocity Sensitivity	-64 – +63	
		22	1	00 – 04	Level Sens Velocity Curve	00 – 04	
		23	1	00	reserved		
		24	1	00 – 7F	AEG Attack Time	0 – 127	
		25	1	00 – 7F	AEG Decay1 Time	0 – 127	
		26	1	00 – 7F	AEG Decay2 Time	0 – 127	
		27	1	00 – 7F	AEG Release Time	0 – 127	
		28	1	00 – 7F	AEG Init Level	0 – 127	
		29	1	00 – 7F	AEG Attack Level	0 – 127	
		2A	1	00 – 7F	AEG Decay 1 Level	0 – 127	
		2B	1	00 – 7F	AEG Decay 2 Level	0 – 127	
		2C	1	00	reserved		
		2D	1	00 – 04	AEG Time Velocity Segment	ATK, ATK+DCY, DCY, ATK+RLS, ALL	
		2E	1	00 – 7F	AEG Time Velocity Sensitivity	-64 – +63	
		2F	1	00 – 7F	Level Key Follow Sensitivity	-200% – +200%	
		30	1	00 – 7C	Level Scaling Break Point 1	C -2 – E8	BP1<BP2<BP3<BP4
		31	1	01 – 7D	Level Scaling Break Point 2	C♯ -2 – F8	BP1<BP2<BP3<BP4
		32	1	02 – 7E	Level Scaling Break Point 3	D -2 – F♯ 8	BP1<BP2<BP3<BP4
		33	1	03 – 7F	Level Scaling Break Point 4	D♯ -2 – G8	BP1<BP2<BP3<BP4
		34	2	00 – 01 00 – 7F	Level Scaling Offset 1	-128 – +127	
		36	2	00 – 01 00 – 7F	Level Scaling Offset 2	-128 – +127	
		38	2	00 – 01 00 – 7F	Level Scaling Offset 3	-128 – +127	
		3A	2	00 – 01 00 – 7F	Level Scaling Offset 4	-128 – +127	
		3C	1	00 – 7F	AEG Time Key Follow Sensitivity	-64 – +63	
		3D	1	00 – 7F	AEG Time Key Follow Center Note	C-2 – G8	

TOTAL SIZE = 30 1E (HEX)

Адрес			Размер	Диапазон значений данных (16-ричн.)	Наименование параметра	Описание	Примечания
42	ee	00	1	10 – 70	Coarse Tune	-48 – +48	
		01	1	00 – 7F	Fine Tune	-64 – +63	
		02	1	00 – 7F	Velocity Pitch Sensitivity	-64 – +63	
		03	1	00	reserved		
		04	1	00 – 7F	Random Pitch Depth	0 – 127	
		05	1	00 – 7F	PEG Hold Time	0 – 127	
		06	1	00 – 7F	PEG Attack Time	0 – 127	
		07	1	00 – 7F	PEG Decay 1 Time	0 – 127	
		08	1	00 – 7F	PEG Decay 2 Time	0 – 127	
		09	1	00 – 7F	PEG Release Time	0 – 127	
		0A	2	00 – 01 00 – 7F	PEG Hold Level	-128 – +127 (-4800 – +4800 [cent])	
		0C	2	00 – 01 00 – 7F	PEG Attack Level	-128 – +127 (-4800 – +4800 [cent])	
		0E	2	00 – 01 00 – 7F	PEG Decay 1 Level	-128 – +127 (-4800 – +4800 [cent])	
		10	2	00 – 01 00 – 7F	PEG Decay 2 Level	-128 – +127 (-4800 – +4800 [cent])	
		12	2	00 – 01 00 – 7F	PEG Release Level	-128 – +127 (-4800 – +4800 [cent])	
		14	1	00 – 7F	PEG Depth	-64 – +63	
		15	1	00 – 04	PEG Time Velocity Segment	ATK, ATK+DCY, DCY, ATK+RLS, ALL	
		16	1	00 – 7F	PEG Time Velocity Sensitivity	-64 – +63	
		17	1	00 – 7F	PEG Level Velocity Sensitivity	-64 – +63	
		18	1	00 – 04	PEG Level Sens Velocity Curve	00 – 04	
		19	1	00 – 7F	Pitch Key Follow Sensitivity	-200% – +200%	
		1A	1	00 – 7F	Pitch Key Follow Center Note	C-2 – G8	
		1B	1	00 – 7F	PEG Time Key Follow Sensitivity	-64 – +63	
		1C	1	00 – 7F	PEG Time Key Follow Center Note	C-2 – G8	
		1D	1	00 – 7F	Pitch Fine Scaling Sensitivity	-64 – +63	

TOTAL = 30 1E (HEX)

Адрес			Размер	Диапазон значений данных (16-ричн.)	Наименование параметра	Описание	Примечания
43	ee	00	1	00 – 15	Filter Type	0: LPF24D, 1: LPF24A, 2: LPF18, 3: LPF18s, 4: LPF12, 5: LPF6, 6: HPF24D, 7: HPF12, 8: BPF12D, 10: BPFw, 11: BPF6, 12: BEF12, 13: BEF6, 14: Dual LPF, 15: Dual HPF, 16: Dual BPF, 17: Dual BEF, 19: LPF12+BPF6, 21: THRU	
		01	2	00 – 01 00 – 7F	Filter Cutoff Frequency	0 – 255	
		03	1	00 – 7F	Filter Cutoff Velocity Sensitivity	-64 – +63	
		04	1		reserved		
		05	1	00 – 7F	Filter Resonance/Width/Band	0 – 127	
		06	1	00 – 7F	Filter Resonance Velocity Sensitivity	-64 – +63	
		07	2	00 – 01 00 – 7F	HPF Cutoff Frequency	0 – 255	
		09	1	40	reserved		
		0A	2	00 – 01 00 – 7F	Distance	0 – 255 (available only when the Dual Type Filter is selected)	
		0C	2	00 – 01 00 – 7F	Filter Gain	0 – 255	
		0E	1	00 – 7F	FEG Hold Time	0 – 127	
		0F	1	00 – 7F	FEG Attack Time	0 – 127	
		10	1	00 – 7F	FEG Decay 1 Time	0 – 127	
		11	1	00 – 7F	FEG Decay 2 Time	0 – 127	
		12	1	00 – 7F	FEG Release Time	0 – 127	
		13	2	00 – 01 00 – 7F	FEG Hold Level	-128 – +127 (-9600 – +9600 [cent])	
		15	2	00 – 01 00 – 7F	FEG Attack Level	-128 – +127 (-9600 – +9600 [cent])	
		17	2	00 – 01 00 – 7F	FEG Decay 1 Level	-128 – +127 (-9600 – +9600 [cent])	
		19	2	00 – 01 00 – 7F	FEG Decay 2 Level	-128 – +127 (-9600 – +9600 [cent])	
		1B	2	00 – 01 00 – 7F	FEG Release Level	-128 – +127 (-9600 – +9600 [cent])	
		1D	1	00 – 7F	FEG Depth	-64 – +63	
		1E	1	00 – 04	FEG Time Velocity Segment	ATK, ATK+DCY, DCY, ATK+RLS, ALL	
		1F	1	00 – 7F	FEG Time Velocity Sensitivity	-64 – +63	
		20	1	00 – 7F	FEG Level Velocity Sensitivity	-64 – +63	
		21	1	00 – 04	FEG Level Velocity Curve	00 – 04	

Адрес			Размер	Диапазон значений данных (16-ричн.)	Наименование параметра	Описание	Примечания
		22	1	00 – 7F	Filter Cutoff Key Follow Sensitivity	-200% – +200%	
		23	1	00 – 7C	Filter Cutoff Scaling Break Point 1	C -2 – E8	BP1<BP2<BP3<BP4
		24	1	01 – 7D	Filter Cutoff Scaling Break Point 2	C♯ -2 – F8	BP1<BP2<BP3<BP4
		25	1	02 – 7E	Filter Cutoff Scaling Break Point 3	D -2 – F♯ 8	BP1<BP2<BP3<BP4
		26	1	03 – 7F	Filter Cutoff Scaling Break Point 4	D♯ -2 – G8	BP1<BP2<BP3<BP4
		27	2	00 – 01 00 – 7F	Filter Cutoff Scaling Offset 1	-128 – +127	
		29	2	00 – 01 00 – 7F	Filter Cutoff Scaling Offset 2	-128 – +127	
		2B	2	00 – 01 00 – 7F	Filter Cutoff Scaling Offset 3	-128 – +127	
		2D	2	00 – 01 00 – 7F	Filter Cutoff Scaling Offset 4	-128 – +127	
		2F	1	00 – 7F	HPF Cutoff Key Follow Sensitivity	-200% – +200%	
		30	1	00 – 7F	FEG Time Key Follow Sensitivity	-64 – +63	
		31	1	00 – 7F	FEG Time Key Follow Center Note	C-2 – G8	

TOTAL SIZE = 50 32 (HEX)

44	ee	00	1	00 – 05	EQ Type	EQ L/H, P.EQ, Boost6, Boost12, Boost18, thru	
		01	1	00 – 1F	EQ Resonance	0 – 31	
		02	2	00 – 01 00 – 7F	EQ 1 Frequency	EQ L/H: 46-182, P.EQ: 83-251	
		04	1	20 – 60	EQ 1 Gain	-32 – +32	
		05	2	00 – 01 00 – 7F	EQ 2 Frequency	EQ L/H: 131-241	
		07	1	20 – 60	EQ 2 Gain	-32 – +32	

TOTAL SIZE = 8 08 (HEX)

44	ee	40	1	00 – 02	LFO Wave	saw, tri, squ	
		41	1	00 – 01	LFO Key On Reset	off, on	
		42	1	00 – 7F	LFO Key On Delay Time	0 – 127	
		43	1	00 – 3F	LFO Speed	0 – 63	
		44	1	00 – 7F	LFO AMod Depth	0 – 127	
		45	1	00 – 7F	LFO PMod Depth	0 – 127	
		46	1	00 – 7F	LFO FMod Depth	0 – 127	
		47	1	00 – 7F	LFO Fade In Time	0 – 127	

TOTAL SIZE = 8 08 (HEX)

44	ee	50	1	00 – 05	Common LFO Phase Offset	+0, +90, +120, +180, +240, +270	
		51	1	00 – 7F	Common LFO Box 1 Depth Ratio	0 – 127	
		52	1	00 – 7F	Common LFO Box 2 Depth Ratio	0 – 127	
		53	1	00 – 7F	Common LFO Box 3 Depth Ratio	0 – 127	

TOTAL SIZE = 4 04 (HEX)

ТАБЛИЦА ОБМЕНА ПАРАМЕТРОВ MIDI (Общие данные голоса удаленного инструмента)

Адрес			Размер	Диапазон значений данных (16-ричн.)	Наименование параметра	Описание	Примечания
46	70	00	1	20 – 7E	Voice Name 1	32 – 126 (ASCII)	
		01	1	20 – 7E	Voice Name 2	32 – 126 (ASCII)	
		02	1	20 – 7E	Voice Name 3	32 – 126 (ASCII)	
		03	1	20 – 7E	Voice Name 4	32 – 126 (ASCII)	
		04	1	20 – 7E	Voice Name 5	32 – 126 (ASCII)	
		05	1	20 – 7E	Voice Name 6	32 – 126 (ASCII)	
		06	1	20 – 7E	Voice Name 7	32 – 126 (ASCII)	
		07	1	20 – 7E	Voice Name 8	32 – 126 (ASCII)	
		08	1	20 – 7E	Voice Name 9	32 – 126 (ASCII)	
		09	1	20 – 7E	Voice Name 10	32 – 126 (ASCII)	
		0A	1		reserved		
		0B	1		reserved		
		0C	1	00 – 10	Voice Category (Main)	0 – 16 (-- – Co)	Ap, Kb, Or, Gt, Ba, St, Br, Rp, Ld, Pd, Sc, Cp, Dr, Se, Me, Co
		0D	1	00 – 03	Voice Category (Sub)	0 – 3 (-- – Sub1 – Sub3)	Depends on Main Category.
		0E	1		reserved		
		0F	1		reserved		
		10	1		reserved		
		11	1		reserved		
		12	1		reserved		
46	70	13	1		reserved		
		14	2	0000 – 20FF	ARP Type MSB ARP Type LSB	0 – 1786: Preset, 8192 – 8447: User	
		16	1	00 – 01	ARP Switch	off, on	
		17	1	00 – 02	ARP Hold	sync-off, off, on	
		18	1	00 – 06	ARP Unit Multiply	50%, 66%, 75%, 100%, 133%, 150%, 200%	
		19	1	00 – 7F	ARP Note Limit Low	C-2 – G8	
		1A	1	00 – 7F	ARP Note Limit High	C-2 – G8	
		1B	1	01 – 7F	ARP Velocity Limit Low	1 – 127	
		1C	1	01 – 7F	ARP Velocity Limit High	1 – 127	
		1D	1	00 – 04	ARP Key Mode	sort, thru, direct, sort+direct, thru+direct	
		1E	1	00 – 01	ARP Vel Mode	original, thru	
		1F	1	00 – 01	ARP Change Timing	realtime, measure	
		20	1	00-06	ARP Quantize Value	32th,16th Triplet, 16th, 8th Triplet, 8th, 4th Triplet, 4th	
		21	1	00-64	ARP Quantize Strength	0 – 100%	
		22	2	0000 – 00C8	ARP Velocity Rate MSB ARP Velocity Rate LSB	0 – 200%	
		24	2	0000 – 00C8	ARP Gate Time Rate MSB ARP Gate Time Rate LSB	0 – 200%	
		26	2	0008 – 00F8	ARP Swing MSB ARP Swing LSB	-120 – 0 – +120	
		28	2	0001 – 012C	ARP Tempo MSB ARP Tempo LSB	1 – 300	
		2A	2	00 – 7F 00 – 7F	ARP SF1 Assign Type MSB ARP SF1 Assign Type LSB	0 – 1786: Preset, 8192 – 8447: User, 16383: No Type	
		2C	2	00 – 7F 00 – 7F	ARP SF2 Assign Type MSB ARP SF2 Assign Type LSB	0 – 1786: Preset, 8192 – 8447: User, 16383: No Type	
		2E	2	00 – 7F 00 – 7F	ARP SF3 Assign Type MSB ARP SF3 Assign Type LSB	0 – 1786: Preset, 8192 – 8447: User, 16383: No Type	
		30	2	00 – 7F 00 – 7F	ARP SF4 Assign Type MSB ARP SF4 Assign Type LSB	0 – 1786: Preset, 8192 – 8447: User, 16383: No Type	
		32	2	00 – 7F 00 – 7F	ARP SF5 Assign Type MSB ARP SF5 Assign Type LSB	0 – 1786: Preset, 8192 – 8447: User, 16383: No Type	
46	70	34	1	00 – 05	Knob Function Select	0 = Pan&Send, 1 = Tone, 2 = Assign, 3 = MeqOffset, 4 = MasterEffect, 5 = ARP FX	
		35	1	01 – 7F	Pan	L63 – C – R63	
		36	1		reserved		
		37	1	00 – 7F	QED Decay Time	-64 – +63	
		38	1		reserved		
		39	1		reserved		
		3A	1		reserved		
		3B	1		reserved		
		3C	1		reserved		
		3D	1		reserved		
		3E	1	00 – 7F	Knob A	-64 – +63	
		3F	1	00 – 7F	Knob B	-64 – +63	
		40	1		reserved		
		41	1	00 – 7F	EQ Low Gain	-64 – +63	
		42	1	00 – 7F	EQ Low Mid Gain	-64 – +63	
		43	1	00 – 7F	EQ High Mid Gain	-64 – +63	
		44	1	00 – 7F	EQ High Gain	-64 – +63	
		45	1	00 – 7F	Assign 1	-64 – +63	

Адрес			Размер	Диапазон значений данных (16-ричн.)	Наименование параметра	Описание	Примечания
		46	1	00 – 7F	Assign 2	-64 – +63	
		47	1	00 – 7F	Cutoff Frequency	-64 – +63	
		48	1	00 – 7F	Resonance	-64 – +63	
		49	1	00 – 7F	Attack Time	-64 – +63	
		4A	1		reserved		
		4B	1		reserved		
		4C	1		reserved		
		4D	1		reserved		
		4E	1		reserved		
		4F	1		reserved		
		50	1		reserved		
		51	1		reserved		

TOTAL SIZE = 82 52 (HEX)

46	00	00	1	00 – 7F	Volume	0 – 127	
		01	1		reserved		
		02	1	10 – 58	QED Pitch Bend Range Upper	-48 – +24 [semitones]	
		03	1	10 – 58	QED Pitch Bend Range Lower	-48 – +24 [semitones]	
		04	1	00 – 7F	Reverb Send	-∞dB – 0dB	
		05	1	00 – 7F	Chorus Send	-∞dB – 0dB	
		06	1		reserved		
		07	1		reserved		

TOTAL SIZE = 8 08 (HEX)

46	00	40	1	00 – 02	Insertion Connect Type	Para, A->B, B->A	
		41	1	00 – 7F	Ins-EF Reverb Send Level	0 – 127	
		42	1	00 – 7F	Ins-EF Chorus Send Level	0 – 127	
		43	1		reserved		

TOTAL SIZE = 4 04 (HEX)

46	01	00	2	00 – 7F 00 – 7F	Reverb Type MSB Reverb Type LSB	Refer to “Effect Parameter List.”	
		02	2	00 – 7F 00 – 7F	Reverb Parameter 1 MSB Reverb Parameter 1 LSB	:	
		04	2	00 – 7F 00 – 7F	Reverb Parameter 2 MSB Reverb Parameter 2 LSB	:	
		06	2	00 – 7F 00 – 7F	Reverb Parameter 3 MSB Reverb Parameter 3 LSB	:	
		08	2	00 – 7F 00 – 7F	Reverb Parameter 4 MSB Reverb Parameter 4 LSB	:	
		0A	2	00 – 7F 00 – 7F	Reverb Parameter 5 MSB Reverb Parameter 5 LSB	:	
		0C	2	00 – 7F 00 – 7F	Reverb Parameter 6 MSB Reverb Parameter 6 LSB	:	
		0E	2	00 – 7F 00 – 7F	Reverb Parameter 7 MSB Reverb Parameter 7 LSB	:	
		10	2	00 – 7F 00 – 7F	Reverb Parameter 8 MSB Reverb Parameter 8 LSB	:	
		12	2	00 – 7F 00 – 7F	Reverb Parameter 9 MSB Reverb Parameter 9 LSB	:	
		14	2	00 – 7F 00 – 7F	Reverb Parameter 10 MSB Reverb Parameter 10 LSB	:	
		16	2	00 – 7F 00 – 7F	Reverb Parameter 11 MSB Reverb Parameter 11 LSB	:	
		18	2	00 – 7F 00 – 7F	Reverb Parameter 12 MSB Reverb Parameter 12 LSB	:	
		1A	2	00 – 7F 00 – 7F	Reverb Parameter 13 MSB Reverb Parameter 13 LSB	:	
		1C	2	00 – 7F 00 – 7F	Reverb Parameter 14 MSB Reverb Parameter 14 LSB	:	
		1E	2	00 – 7F 00 – 7F	Reverb Parameter 15 MSB Reverb Parameter 15 LSB	:	
		20	2	00 – 7F 00 – 7F	Reverb Parameter 16 MSB Reverb Parameter 16 LSB	:	
		22	1	00 – 7F	Reverb Return	-∞dB – 0dB – +6dB (0 – 96 – 127)	
		23	1	01 – 7F	Reverb Pan	L63 – C – R63	

TOTAL SIZE = 36 24 (HEX)

Адрес			Размер	Диапазон значений данных (16-ричн.)	Наименование параметра	Описание	Примечания
46	02	00	2	00 – 7F 00 – 7F	Chorus Type MSB Chorus Type LSB	Refer to “Effect Parameter List.”	
		02	2	00 – 7F 00 – 7F	Chorus Parameter 1 MSB Chorus Parameter 1 LSB	:	
		04	2	00 – 7F 00 – 7F	Chorus Parameter 2 MSB Chorus Parameter 2 LSB	:	
		06	2	00 – 7F 00 – 7F	Chorus Parameter 3 MSB Chorus Parameter 3 LSB	:	
		08	2	00 – 7F 00 – 7F	Chorus Parameter 4 MSB Chorus Parameter 4 LSB	:	
		0A	2	00 – 7F 00 – 7F	Chorus Parameter 5 MSB Chorus Parameter 5 LSB	:	
		0C	2	00 – 7F 00 – 7F	Chorus Parameter 6 MSB Chorus Parameter 6 LSB	:	
		0E	2	00 – 7F 00 – 7F	Chorus Parameter 7 MSB Chorus Parameter 7 LSB	:	
		10	2	00 – 7F 00 – 7F	Chorus Parameter 8 MSB Chorus Parameter 8 LSB	:	
		12	2	00 – 7F 00 – 7F	Chorus Parameter 9 MSB Chorus Parameter 9 LSB	:	
		14	2	00 – 7F 00 – 7F	Chorus Parameter 10 MSB Chorus Parameter 10 LSB	:	
		16	2	00 – 7F 00 – 7F	Chorus Parameter 11 MSB Chorus Parameter 11 LSB	:	
		18	2	00 – 7F 00 – 7F	Chorus Parameter 12 MSB Chorus Parameter 12 LSB	:	
		1A	2	00 – 7F 00 – 7F	Chorus Parameter 13 MSB Chorus Parameter 13 LSB	:	
		1C	2	00 – 7F 00 – 7F	Chorus Parameter 14 MSB Chorus Parameter 14 LSB	:	
		1E	2	00 – 7F 00 – 7F	Chorus Parameter 15 MSB Chorus Parameter 15 LSB	:	
		20	2	00 – 7F 00 – 7F	Chorus Parameter 16 MSB Chorus Parameter 16 LSB	:	
		22	1	00 – 7F	Chorus Return	-∞dB – 0dB – +6dB (0 – 96 – 127)	
		23	1	01 – 7F	Chorus Pan	L63 – C – R63	
		24	1	00 – 7F	Send Chorus To Reverb	-∞dB – 0dB (0 – 127)	

TOTAL SIZE = 37 25 (HEX)

46	03	00	2	00 – 7F 00 – 7F	Insertion-A Type MSB Insertion-A Type LSB	Refer to “Effect Parameter List.”	
		02	2	00 – 7F 00 – 7F	Insertion-A Parameter 1 MSB Insertion-A Parameter 1 LSB	:	
		04	2	00 – 7F 00 – 7F	Insertion-A Parameter 2 MSB Insertion-A Parameter 2 LSB	:	
		06	2	00 – 7F 00 – 7F	Insertion-A Parameter 3 MSB Insertion-A Parameter 3 LSB	:	
		08	2	00 – 7F 00 – 7F	Insertion-A Parameter 4 MSB Insertion-A Parameter 4 LSB	:	
		0A	2	00 – 7F 00 – 7F	Insertion-A Parameter 5 MSB Insertion-A Parameter 5 LSB	:	
		0C	2	00 – 7F 00 – 7F	Insertion-A Parameter 6 MSB Insertion-A Parameter 6 LSB	:	
		0E	2	00 – 7F 00 – 7F	Insertion-A Parameter 7 MSB Insertion-A Parameter 7 LSB	:	
		10	2	00 – 7F 00 – 7F	Insertion-A Parameter 8 MSB Insertion-A Parameter 8 LSB	:	
		12	2	00 – 7F 00 – 7F	Insertion-A Parameter 9 MSB Insertion-A Parameter 9 LSB	:	
		14	2	00 – 7F 00 – 7F	Insertion-A Parameter 10 MSB Insertion-A Parameter 10 LSB	:	
		16	2	00 – 7F 00 – 7F	Insertion-A Parameter 11 MSB Insertion-A Parameter 11 LSB	:	
		18	2	00 – 7F 00 – 7F	Insertion-A Parameter 12 MSB Insertion-A Parameter 12 LSB	:	
		1A	2	00 – 7F 00 – 7F	Insertion-A Parameter 13 MSB Insertion-A Parameter 13 LSB	:	
		1C	2	00 – 7F 00 – 7F	Insertion-A Parameter 14 MSB Insertion-A Parameter 14 LSB	:	
		1E	2	00 – 7F 00 – 7F	Insertion-A Parameter 15 MSB Insertion-A Parameter 15 LSB	:	
		20	2	00 – 7F 00 – 7F	Insertion-A Parameter 16 MSB Insertion-A Parameter 16 LSB	:	

TOTAL SIZE = 34 22 (HEX)

Адрес			Размер	Диапазон значений данных (16-ричн.)	Наименование параметра	Описание	Примечания
46	04	00	2	00 – 7F 00 – 7F	Insertion-B Type MSB Insertion-B Type LSB	Refer to “Effect Parameter List.”	
		02	2	00 – 7F 00 – 7F	Insertion-B Parameter 1 MSB Insertion-B Parameter 1 LSB	:	
		04	2	00 – 7F 00 – 7F	Insertion-B Parameter 2 MSB Insertion-B Parameter 2 LSB	:	
		06	2	00 – 7F 00 – 7F	Insertion-B Parameter 3 MSB Insertion-B Parameter 3 LSB	:	
		08	2	00 – 7F 00 – 7F	Insertion-B Parameter 4 MSB Insertion-B Parameter 4 LSB	:	
		0A	2	00 – 7F 00 – 7F	Insertion-B Parameter 5 MSB Insertion-B Parameter 5 LSB	:	
		0C	2	00 – 7F 00 – 7F	Insertion-B Parameter 6 MSB Insertion-B Parameter 6 LSB	:	
		0E	2	00 – 7F 00 – 7F	Insertion-B Parameter 7 MSB Insertion-B Parameter 7 LSB	:	
		10	2	00 – 7F 00 – 7F	Insertion-B Parameter 8 MSB Insertion-B Parameter 8 LSB	:	
		12	2	00 – 7F 00 – 7F	Insertion-B Parameter 9 MSB Insertion-B Parameter 9 LSB	:	
		14	2	00 – 7F 00 – 7F	Insertion-B Parameter 10 MSB Insertion-B Parameter 10 LSB	:	
		16	2	00 – 7F 00 – 7F	Insertion-B Parameter 11 MSB Insertion-B Parameter 11 LSB	:	
		18	2	00 – 7F 00 – 7F	Insertion-B Parameter 12 MSB Insertion-B Parameter 12 LSB	:	
		1A	2	00 – 7F 00 – 7F	Insertion-B Parameter 13 MSB Insertion-B Parameter 13 LSB	:	
		1C	2	00 – 7F 00 – 7F	Insertion-B Parameter 14 MSB Insertion-B Parameter 14 LSB	:	
		1E	2	00 – 7F 00 – 7F	Insertion-B Parameter 15 MSB Insertion-B Parameter 15 LSB	:	
		20	2	00 – 7F 00 – 7F	Insertion-B Parameter 16 MSB Insertion-B Parameter 16 LSB	:	

TOTAL SIZE = 34 22 (HEX)

46	05	00	1	00 – 0C	Controller Set 1 Source	0: PB, 1: MW, 3: AT, 4: FC, 5: FS, 6: RB, 7: BC, 8: AS1, 9: AS2, 12: FC2	
		01	2	00 00 – 23	Controller Set 1 Destination MSB Controller Set 1 Destination LSB	0 – 35	
		03	1	00 – 7F	Controller Set 1 Depth	-64 – +63	
		04	1		reserved		
		05	1	00 – 0C	Controller Set 2 Source	0: PB, 1: MW, 3: AT, 4: FC, 5: FS, 6: RB, 7: BC, 8: AS1, 9: AS2, 12: FC2	
		06	2	00 00 – 23	Controller Set 2 Destination MSB Controller Set 2 Destination LSB	0 – 35	
		08	1	00 – 7F	Controller Set 2 Depth	-64 – +63	
		09	1		reserved		
		0A	1	00 – 0C	Controller Set 3 Source	0: PB, 1: MW, 3: AT, 4: FC, 5: FS, 6: RB, 7: BC, 8: AS1, 9: AS2, 12: FC2	
		0B	2	00 00 – 23	Controller Set 3 Destination MSB Controller Set 3 Destination LSB	0 – 35	
		0D	1	00 – 7F	Controller Set 3 Depth	-64 – +63	
		0E	1		reserved		
		0F	1	00 – 0C	Controller Set 4 Source	0: PB, 1: MW, 3: AT, 4: FC, 5: FS, 6: RB, 7: BC, 8: AS1, 9: AS2, 12: FC2	
		10	2	00 00 – 23	Controller Set 4 Destination MSB Controller Set 4 Destination LSB	0 – 35	
		12	1	00 – 7F	Controller Set 4 Depth	-64 – +63	
		13	1		reserved		
		14	1	00 – 0C	Controller Set 5 Source	0: PB, 1: MW, 3: AT, 4: FC, 5: FS, 6: RB, 7: BC, 8: AS1, 9: AS2, 12: FC2	
		15	2	00 00 – 23	Controller Set 5 Destination MSB Controller Set 5 Destination LSB	0 – 35	
		17	1	00 – 7F	Controller Set 5 Depth	-64 – +63	
		18	1		reserved		
		19	1	00 – 0C	Controller Set 6 Source	0: PB, 1: MW, 3: AT, 4: FC, 5: FS, 6: RB, 7: BC, 8: AS1, 9: AS2, 12: FC2	
		1A	2	00 00 – 23	Controller Set 6 Destination MSB Controller Set 6 Destination LSB	0 – 35	
		1C	1	00 – 7F	Controller Set 6 Depth	-64 – +63	
		1D	1		reserved		

TOTAL SIZE = 30 1E (HEX)

ТАБЛИЦА ОБМЕНА ПАРАМЕТРОВ MIDI (Высота тона ударного инструмента)

Адрес			Размер	Диапазон значений данных (16-ричн.)	Наименование параметра	Описание	Примечания
47	ee	00	1	00 – 01	Element Assign	off, on	
		01	1	00 – 01	Wave Type	0: PresetWave, 1: Voice	
		02	1		reserved		
		03	1	00 – 01	Receive Note Off	off, on	
		04	1	00 – 01	Assign Mode	single, multi	*1
		05	1	00 – 7F	Alternate Group	0: off, 1 – 127	
		06	2	00 – 7F 00 – 7F	Wave Number MSB Wave Number LSB	1st bit 6-0 → bit 13-7 2nd bit 6-0 → bit 6-0	
		08	3	00 – 7F 00 – 7F 00 – 7F	Voice Bank Number MSB Voice Bank Number LSB Voice Number	0 – 127 0 – 127 0 – 127	*1 *1 *1
		0B	1	01 – 7F	Pan	L63 – C – R63	*1
		0C	1	00 – 7F	Random Pan Depth	0 – 127	
		0D	1	00 – 7F	Alternate Pan Depth	L64 – 0 – R63	
		0E	1	00 – 7F	Reverb Send Level	0 – 127	*1
		0F	1	00 – 7F	Chorus Send Level	0 – 127	*1
		10	1		reserved		
		11	1	00 – 02	Insertion Effect Switch	thru, insA, insB	*1
		12	1		reserved		*1

TOTAL SIZE = 19 13 (HEX)

47	ee	20	1	00 – 7F	Element Level	0 – 127	*1
		21	1	00 – 7F	Level Velocity Sensitivity	-64 – +63	
		22	1		reserved		
		23	1	00 – 7F	AEG Attack Time	0 – 127	
		24	1	00 – 7F	AEG Decay 1 Time	0 – 127	
		25	1	00 – 7F	AEG Decay 2 Time	0 – 126, hold	
		26	1		reserved		
		27	1		reserved		
		28	1		reserved		
		29	1	00 – 7F	AEG Decay 1 Level	0 – 127	
		2A	1		reserved		
		2B	1		reserved		

TOTAL SIZE = 12 0C (HEX)

Адрес			Размер	Диапазон значений данных (16-ричн.)	Наименование параметра	Описание	Примечания
48	ee	00	1	10 – 70	Coarse Tune	-48 – +48	*1
		01	1	00 – 7F	Fine Tune	-64 – +63	*1
		02	1	00 – 7F	Pitch Velocity Sensitivity	-64 – +63	

TOTAL SIZE = 3 03 (HEX)

49	ee	00	1		reserved		
		01	2	00 – 01 00 – 7F	LPF Cutoff Frequency MSB LPF Cutoff Frequency LSB	0 – 255	
		03	1	00 – 7F	LPF Cutoff Velocity Sensitivity	-64 – +63	
		04	1	00 – 7F	LPF Resonance	0 – 127	
		05	1		reserved		
		06	2	00 – 01 00 – 7F	HPF Cutoff Frequency MSB HPF Cutoff Frequency LSB	0 – 255	

TOTAL SIZE = 8 08 (HEX)

4A	ee	00	1	00 – 05	EQ Type	EQ L/H, P.EQ, Boost6, Boost12, Boost18, thru	
		01	1	00 – 1F	EQ Resonance	0 – 31	
		02	2	00 – 01 00 – 7F	EQ 1 Frequency MSB EQ 1 Frequency LSB	EQ L/H: 46-182, P.EQ: 83-251	
		04	1	20 – 60	EQ 1 GAIN	-32 – +32	
		05	2	00 – 01 00 – 7F	EQ 2 Frequency MSB EQ 2 Frequency LSB	EQ L/H: 131-241	
		07	1	20 – 60	EQ 2 GAIN	-32 – +32	

TOTAL SIZE = 8 08 (HEX)

ee = Номер элемента (00 - 48: C0 - C6

* 1 Если для типа Wave / Voice выбран вариант «voice», доступны только эти параметры.

ТАБЛИЦА ОБМЕНА ПАРАМЕТРОВ MIDI (Общий режим MULTI COMMON для паттерна или песни)

Адрес			Размер	Диапазон значений данных (16-ричн.)	Наименование параметра	Описание	Примечания
36	00	00	1		reserved		
		01	1		reserved		
		02	1		reserved		
		03	1		reserved		
		04	1		reserved		
		05	1		reserved		
		06	1		reserved		
		07	1		reserved		
		08	1		reserved		
		09	1		reserved		
		0A	1		reserved		
		0B	1		reserved		
		0C	1		reserved		
		0D	1		reserved		
		0E	1		reserved		
		0F	1		reserved		
		10	1		reserved		
		11	1	00 – 01	ARP MIDI Out Switch	off, on	
		12	1	00 – 10	ARP MIDI Out Channel	1 – 16, kbd-ch	
36	00	13	1		reserved		
		14	2	00 – 7F 00 – 7F	ARP Type MSB ARP Type LSB	0-1786: Preset, 8192-8447: User	
		16	1	00 – 01	ARP Switch	off, on	
		17	1	00 – 02	ARP Hold	sync-off, off, on	
		18	1	00 – 06	ARP Unit Multiplay	50%, 66%, 75%, 100%, 133%, 150%, 200%	
		19	1	00 – 7F	ARP Note Limit Low	C-2 – G8	
		1A	1	00 – 7F	ARP Note Limit High	C-2 – G8	
		1B	1	01 – 7F	ARP Velocity Limit Low	1 – 127	
		1C	1	01 – 7F	ARP Velocity Limit High	1 – 127	
		1D	1	00 – 04	ARP Key Mode	sort, thru, direct, sort+direct, thru+direct	
		1E	1	00 – 01	ARP Vel Mode	original, thru	
		1F	1	00 – 01	ARP Change Timing	realtime, measure	
		20	1	00 – 06	ARP Quantize Value	32th, 16th Triplet, 16th, 8th Triplet, 8th, 4th Triplet, 4th	
		21	1	00 – 64	ARP Quantize Strength	0 – 100%	
		22	2	0000 – 00C8	ARP Velocity Rate MSB ARP Velocity Rate LSB	0 – 200%	
		24	2	0000 – 00C8	ARP Gate Time Rate MSB ARP Gate Time Rate LSB	0 – 200%	
		26	2		ARP Swing MSB ARP Swing LSB	-120 – 0 – +120	
		28	1		reserved		
			1		reserved		
		2A	2	00 – 7F 00 – 7F	ARP SF1 Assign Type MSB ARP SF1 Assign Type LSB	0-1786: Preset, 8192-8447: User, 16383: No Type	
		2C	2	00 – 7F 00 – 7F	ARP SF2 Assign Type MSB ARP SF2 Assign Type LSB	0-1786: Preset, 8192-8447: User, 16383: No Type	
		2E	2	00 – 7F 00 – 7F	ARP SF3 Assign Type MSB ARP SF3 Assign Type LSB	0 -1 786: Preset, 8192 – 8447: User, 16383: No Type	
		30	2	00 – 7F 00 – 7F	ARP SF4 Assign Type MSB ARP SF4 Assign Type LSB	0 – 1786: Preset, 8192 – 8447: User, 16383: No Type	
		32	2	00 – 7F 00 – 7F	ARP SF5 Assign Type MSB ARP SF5 Assign Type LSB	0 – 1786: Preset, 8192 – 8447: User, 16383: No Type	
36	00	34	1	00 – 05	Knob Function Select	0=Pan&Send, 1=Tone, 2=Assign, 3=PartEQ, 4=MasterEffect, 5=ARP FX	
		35	1		reserved		
		36	1		reserved		
		37	1		reserved		
		38	1		reserved		
		39	1		reserved		
		3A	1		reserved		
		3B	1		reserved		
		3C	1		reserved		
		3D	1		reserved		
		3E	1	00 – 7F	Knob A	-64 – +63	
		3F	1	00 – 7F	Knob B	-64 – +63	
		40	1		reserved		
		41	1	00 – 7F	EQ Low Gain	-64 – +63	
		42	1	00 – 7F	EQ Low Mid Gain	-64 – +63	
		43	1	00 – 7F	EQ High Mid Gain	-64 – +63	
		44	1	00 – 7F	EQ High Gain	-64 – +63	
		45	1	00 – 7F	Assign 1	-64 – +63	
		46	1	00 – 7F	Assign 2	-64 – +63	
		47	1		reserved		
		48	1		reserved		
		49	1		reserved		
		4A	1		reserved		

Адрес			Размер	Диапазон значений данных (16-ричн.)	Наименование параметра	Описание	Примечания
		4B	1		reserved		
		4C	1		reserved		
		4D	1		reserved		
		4E	1		reserved		
		4F	1		reserved		
		50	1		reserved		
		51	1		reserved		
36	00	52	1		reserved		
		53	1		reserved		
		54	1		reserved		
		55	1		reserved		
		56	1		reserved		
		57	1		reserved		
		58	1	00 – 5F	Assign 1 Control Number	off, 1 – 95	
		59	1	00 – 5F	Assign 2 Control Number	off, 1 – 95	
		5A	1	00 – 5F	BC Control Number	off, 1 – 95	
		5B	1	00 – 5F	FC2 Control Number	off, 1 – 95	
		5C	1	00 – 5F	FC1 Control Number	off, 1 – 95	
		5D	1		reserved		
		5E	1	00 – 5F	RB Control Number	off,1 – 95	
		5F	1		reserved		
		60	4	00	Insertion Part Sw	reserved	Up to three parts can be turned on simultaneously.
				00 – 03		bit 0: off, on Part 15 bit 1: off, on Part 16 bit 2: reserved bit 3: reserved bit 4: reserved bit 5: reserved bit 6: reserved	
				00 – 7F		bit 0: off, on Part 8 bit 1: off, on Part 9 bit 2: off, on Part 10 bit 3: off, on Part 11 bit 4: off, on Part 12 bit 5: off, on Part 13 bit 6: off, on Part 14	
				00 – 7F		bit 0: off, on Part 1 bit 1: off, on Part 2 bit 2: off, on Part 3 bit 3: off, on Part 4 bit 4: off, on Part 5 bit 5: off, on Part 6 bit 6: off, on Part 7	
		64	1		reserved		

TOTAL SIZE = 101 65 (HEX)

36	01	00	2	00 – 7F 00 – 7F	Reverb Type MSB Reverb Type LSB	Refer to “Effect Parameter List.”	
		02	2	00 – 7F 00 – 7F	Reverb Parameter 1 MSB Reverb Parameter 1 LSB	:	
		04	2	00 – 7F 00 – 7F	Reverb Parameter 2 MSB Reverb Parameter 2 LSB	:	
		06	2	00 – 7F 00 – 7F	Reverb Parameter 3 MSB Reverb Parameter 3 LSB	:	
		08	2	00 – 7F 00 – 7F	Reverb Parameter 4 MSB Reverb Parameter 4 LSB	:	
		0A	2	00 – 7F 00 – 7F	Reverb Parameter 5 MSB Reverb Parameter 5 LSB	:	
		0C	2	00 – 7F 00 – 7F	Reverb Parameter 6 MSB Reverb Parameter 6 LSB	:	
		0E	2	00 – 7F 00 – 7F	Reverb Parameter 7 MSB Reverb Parameter 7 LSB	:	
		10	2	00 – 7F 00 – 7F	Reverb Parameter 8 MSB Reverb Parameter 8 LSB	:	
		12	2	00 – 7F 00 – 7F	Reverb Parameter 9 MSB Reverb Parameter 9 LSB	:	
		14	2	00 – 7F 00 – 7F	Reverb Parameter 10 MSB Reverb Parameter 10 LSB	:	
		16	2	00 – 7F 00 – 7F	Reverb Parameter 11 MSB Reverb Parameter 11 LSB	:	
		18	2	00 – 7F 00 – 7F	Reverb Parameter 12 MSB Reverb Parameter 12 LSB	:	
		1A	2	00 – 7F 00 – 7F	Reverb Parameter 13 MSB Reverb Parameter 13 LSB	:	
		1C	2	00 – 7F 00 – 7F	Reverb Parameter 14 MSB Reverb Parameter 14 LSB	:	
		1E	2	00 – 7F 00 – 7F	Reverb Parameter 15 MSB Reverb Parameter 15 LSB	:	
		20	2	00 – 7F 00 – 7F	Reverb Parameter 16 MSB Reverb Parameter 16 LSB	:	
		22	1	00 – 7F	Reverb Return	-∞dB – 0dB – +6dB (0 – 96 – 127)	
		23	1	01 – 7F	Reverb Pan	L63 – C – R63	

TOTAL SIZE = 36 24 (HEX)

Адрес			Размер	Диапазон значений данных (16-ричн.)	Наименование параметра	Описание	Примечания
36	02	00	2	00 – 7F 00 – 7F	Chorus Type MSB Chorus Type LSB	Refer to “Effect Parameter List.”	
		02	2	00 – 7F 00 – 7F	Chorus Parameter 1 MSB Chorus Parameter 1 LSB	:	
		04	2	00 – 7F 00 – 7F	Chorus Parameter 2 MSB Chorus Parameter 2 LSB	:	
		06	2	00 – 7F 00 – 7F	Chorus Parameter 3 MSB Chorus Parameter 3 LSB	:	
		08	2	00 – 7F 00 – 7F	Chorus Parameter 4 MSB Chorus Parameter 4 LSB	:	
		0A	2	00 – 7F 00 – 7F	Chorus Parameter 5 MSB Chorus Parameter 5 LSB	:	
		0C	2	00 – 7F 00 – 7F	Chorus Parameter 6 MSB Chorus Parameter 6 LSB	:	
		0E	2	00 – 7F 00 – 7F	Chorus Parameter 7 MSB Chorus Parameter 7 LSB	:	
		10	2	00 – 7F 00 – 7F	Chorus Parameter 8 MSB Chorus Parameter 8 LSB	:	
		12	2	00 – 7F 00 – 7F	Chorus Parameter 9 MSB Chorus Parameter 9 LSB	:	
		14	2	00 – 7F 00 – 7F	Chorus Parameter 10 MSB Chorus Parameter 10 LSB	:	
		16	2	00 – 7F 00 – 7F	Chorus Parameter 11 MSB Chorus Parameter 11 LSB	:	
		18	2	00 – 7F 00 – 7F	Chorus Parameter 12 MSB Chorus Parameter 12 LSB	:	
		1A	2	00 – 7F 00 – 7F	Chorus Parameter 13 MSB Chorus Parameter 13 LSB	:	
		1C	2	00 – 7F 00 – 7F	Chorus Parameter 14 MSB Chorus Parameter 14 LSB	:	
		1E	2	00 – 7F 00 – 7F	Chorus Parameter 15 MSB Chorus Parameter 15 LSB	:	
		20	2	00 – 7F 00 – 7F	Chorus Parameter 16 MSB Chorus Parameter 16 LSB	:	
		22	1	00 – 7F	Chorus Return	-∞dB – 0dB –+6dB (0 – 96 – 127)	
		23	1	01 – 7F	Chorus Pan	L63 – C – R63	
		24	1	00 – 7F	Send Chorus To Reverb	-∞dB – 0dB (0 – 127)	

TOTAL SIZE = 37 25 (HEX)

36	10	00	1	34 – 4C	EQ Gain 1	-12 – +12 [dB]	
		01	1	04 – 28	EQ Frequency 1	32 – 2000 [Hz]	
		02	1	01 – 78	EQ Q1	0.1 – 12.0	
		03	1	00 – 01	EQ Shape 1	shelv, peak	
		04	1	34 – 4C	EQ Gain 2	-12 – +12 [dB]	
		05	1	0E – 36	EQ Frequency 2	100 – 10.0 [kHz]	
		06	1	01 – 78	EQ Q2	0.1 – 12.0	
			1	01	EQ Shape 2	peaking	reserved
		08	1	34 – 4C	EQ Gain 3	-12 – +12 [dB]	
		09	1	0E – 36	EQ Frequency 3	100 – 10.0 [kHz]	
		0A	1	01 – 78	EQ Q3	0. 1- 12.0	
			1		reserved		
		0C	1	34 – 4C	EQ Gain 4	-12 – +12 [dB]	
		0D	1	0E – 36	EQ Frequency 4	100 – 10.0 [kHz]	
		0E	1	01 – 78	EQ Q4	0.1 – 12.0	
			1		reserved		
		10	1	34 – 4C	EQ Gain 5	-12 – +12 [dB]	
		11	1	1C – 3A	EQ Frequency 5	0.5 – 16.0 [kHz]	
		12	1	01 – 78	EQ Q5	0.1 – 12.0	
		13	1	00 – 01	EQ Shape 5	shelv, peak	

TOTAL SIZE = 20 14 (HEX)

Адрес			Размер	Диапазон значений данных (16-ричн.)	Наименование параметра	Описание	Примечания
36	11	00	2	00 – 7F 00 – 7F	Master Effect Type MSB Master Effect Type LSB	Refer to “Effect Parameter List.”	
		02	2	00 – 7F 00 – 7F	Master Effect Parameter 1 MSB Master Effect Parameter 1 LSB	:	
		04	2	00 – 7F 00 – 7F	Master Effect Parameter 2 MSB Master Effect Parameter 2 LSB	:	
		06	2	00 – 7F 00 – 7F	Master Effect Parameter 3 MSB Master Effect Parameter 3 LSB	:	
		08	2	00 – 7F 00 – 7F	Master Effect Parameter 4 MSB Master Effect Parameter 4 LSB	:	
		0A	2	00 – 7F 00 – 7F	Master Effect Parameter 5 MSB Master Effect Parameter 5 LSB	:	
		0C	2	00 – 7F 00 – 7F	Master Effect Parameter 6 MSB Master Effect Parameter 6 LSB	:	
		0E	2	00 – 7F 00 – 7F	Master Effect Parameter 7 MSB Master Effect Parameter 7 LSB	:	
		10	2	00 – 7F 00 – 7F	Master Effect Parameter 8 MSB Master Effect Parameter 8 LSB	:	
		12	2	00 – 7F 00 – 7F	Master Effect Parameter 9 MSB Master Effect Parameter 9 LSB	:	
		14	2	00 – 7F 00 – 7F	Master Effect Parameter 10 MSB Master Effect Parameter 10 LSB	:	
		16	2	00 – 7F 00 – 7F	Master Effect Parameter 11 MSB Master Effect Parameter 11 LSB	:	
		18	2	00 – 7F 00 – 7F	Master Effect Parameter 12 MSB Master Effect Parameter 12 LSB	:	
		1A	2	00 – 7F 00 – 7F	Master Effect Parameter 13 MSB Master Effect Parameter 13 LSB	:	
		1C	2	00 – 7F 00 – 7F	Master Effect Parameter 14 MSB Master Effect Parameter 14 LSB	:	
		1E	2	00 – 7F 00 – 7F	Master Effect Parameter 15 MSB Master Effect Parameter 15 LSB	:	
		20	2	00 – 7F 00 – 7F	Master Effect Parameter 16 MSB Master Effect Parameter 16 LSB	:	
		22	1	00 – 01	Master Effect ON/OFF	0: OFF, 1: ON	

TOTAL SIZE = 35 23 (HEX)

ТАБЛИЦА ОБМЕНА ПАРАМЕТРОВ MIDI (Общие данные MULTI)

Адрес			Размер	Диапазон значений данных (16-ричн.)	Наименование параметра	Описание	Примечания
37	pp	00	1	00 – 7F	Bank Select MSB	0 – 127	
		01	1	00 – 7F	Bank Select LSB	0 – 127	
		02	1	00 – 7F	Program Number	1 – 128	
		03	1	00 – 0F, 7F	Receive Channel	1 – 16, off (7F)	
		04	1	00 – 01	Part Mode	mono, poly	
		05	1	01 – 7F	Velocity Limit Low	1 – 127	
		06	1	01 – 7F	Velocity Limit High	1 – 127	
		07	1	00 – 7F	Note Limit Low	C-2 – G8	
		08	1	00 – 7F	Note Limit High	C-2 – G8	
		09	1	10 – 58	Pitch Bend Range Upper	-48 – +24 (PB Part: -24 – +24)	
		0A	1	10 – 58	Pitch Bend Range Lower	-48 – +24	
		0B	1	00 – 7F	Velocity Sense Depth	0 – 127	
		0C	1	00 – 7F	Velocity Sense Offset	0 – 127	
		0D	1	00 – 7F	Volume	0 – 127	
		0E	1	01 – 7F	Pan	L63 – C – R63	
		0F	1		reserved		
		10	2	00 – 0F 00 – 0F	Detune MSB Detune LSB	-12.8 – +12.7 [Hz] 1st bit 3-0 → bit 7-4 2nd bit 3-0 → bit 3-0	
		12	1	00 – 7F	Reverb Send	0 – 127	
		13	1	00 – 7F	Chorus Send	0 – 127	
		14	1	00 – 7F	reserved		
		15	1	00 – 7F	Dry Level	0 – 127	
		16	1	28 – 58	Note Shift	-24 – +24 [semitones]	
		17	1	00 – 7F	Filter Cutoff Frequency	-64 – +63	
		18	1	00 – 7F	Filter Resonance/Width	-64 – +63	
		19	1		reserved		
		1A	1	00 – 01	Portamento Switch	off, on	
		1B	1	00 – 7F	Portamento Time	0 – 127	
		1C	1	00 – 01	Portamento Mode	fingered, fulltime	
		1D	1		reserved		
		1E	1		reserved		
37	pp	1F	1	00 – 7F	reserved Arpeggio Sw Receive Control Change Receive Bank Select Receive Program Change Receive AT Receive PB	bit0: reserved bit1: Arpeggio Sw off, on bit2: off, on Control Change bit3: off, on Bank Select bit4: off, on Program Change bit5: off, on AT bit6: off, on PB	
		20	1	00 – 7F	Receive Volume/Expression Receive Pan Receive Sustain/Sostenuto Receive MW	bit0: off, on Volume/Expression bit1: off, on Pan bit2: reserved bit3: off, on Sustain/Sostenuto bit4: reserved bit5: off, on MW bit6: reserved	
		21	1	00 – 7F	Receive FC2 Receive FS Receive FC1 Receive BC Receive Knob 1 Receive Knob 2 Receive RB	bit0: off, on FC2 bit1: off, on FS bit2: off, on FC1 bit3: off, on BC bit4: off, on KN1 bit5: off, on KN2 bit6: off, on RB	
37	pp	22	1	00 – 7F	AEG Decay 2 Level (EG Sustain Level)	-64 – +63	
		23	1	00 – 7F	AEG Attack Time (EG Attack Time)	-64 – +63	
		24	1	00 – 01	Voice Pan on/off	off, on	
		25	1	00 – 7F	AEG Decay 2 Time (EG Decay Time)	-64 – +63	
		26	1	00 – 7F	AEG Release Time (EG Release Time)	-64 – +63	
		27	1	00 – 7F	FEG Decay 2 Level (EG Sustain Level)	-64 – +63	
		28	1	00 – 7F	FEG Attack Time (EG Attack Time)	-64 – +63	
		29	1		reserved		
		2A	1	00 – 7F	FEG Decay 2 Time (EG Decay Time)	-64 – +63	
		2B	1	00 – 7F	FEG Release Time (EG Release Time)	-64 – +63	
		2C	1	00 – 7F	FEG DEPTH	-64 – +63	
37	pp	2D	1		reserved		
		2E	2	002E – 00B6	Low Frequency MSB Low Frequency LSB	50.1 – 2.00k	
		30	1	20 – 60	Low Gain	-32 – +32	
		31	1		reserved		
		32	2	0053 – 00F1	Mid Frequency MSB Mid Frequency LSB	139.7 – 10.1k	
		34	1	20 – 60	Mid Gain	-32 – +32	
		35	1	00 – 1F	Mid Resonance	0 – 31	
		36	2	0083 – 00FF	High Frequency MSB High Frequency LSB	503.8 – 14k	
		38	1	20 – 60	High Gain	-32 – +32	
		39	1		reserved		

TOTAL SIZE = 58 3A (HEX)

pp= номер партии

00 – 0F Part 1 – 16 (Normal, Drum)

Function...		Transmitted	Recognized	Remarks
Basic Channel	Default Changed	1 - 16 ×	1 - 16 ×	Memorized
Mode	Default Messages Altered	× × **********	× × ×	
Note Number : True voice		0 - 127 **********	0 - 127	
Velocity	Note ON Note OFF	○ 9nH,v=1-127 × 9nH,v=0	○ 9nH,v=1-127 × 9nH,v=0	
After Touch	Key's Ch's	○ ○	○ ○	
Pitch Bend		○	○	
Control Change	0-121	○	○	
Prog Change : True #		○ 0 - 127 **********	○ 0 - 127	
System Exclusive		○	○	
Common	: Song Pos. : Song Sel. : Tune	○ *1 ○ *1 ×	○ *1 ○ *1 ×	
System Real Time	: Clock : Commands	○ *2 ○ *1	○ *3 ○ *1	
Aux Mes-sages	: All Sound Off : Reset All Cntrls : Local ON/OFF : All Notes OFF : Active Sense : Reset	○ ○ ○ × × ×	○ ○ ○ × × ×	

Notes:
*1 if Seq Control in/out is enabled.
*2 if MIDI clock out is on.
*3 if MIDI Sync is MIDI.
send MMC (stop, deferred play, locate) if sync mode is MTC.
receive MMC quarter frame message if sync mode is MTC.

Mode 1 : OMNI ON , POLY Mode 2 : OMNI ON ,MONO ○ : Yes
Mode 3 : OMNI OFF, POLY Mode 4 : OMNI OFF,MONO × : No

Function...		Transmitted	Recognized	Remarks
Basic Channel	Default Changed	1 - 16 1 - 16	1 - 16 1 - 16	Memorized
Mode	Default Messages Altered	3 X **********	1 1 - 4(m=1) *2 X	Memorized
Note Number : True voice		0 - 127 **********	0 - 127 0 - 127	Transpose
Velocity	Note ON Note OFF	O 9nH,v=1-127 X 9nH,v=0	O v=1-127 X	
After Touch	Key's Ch's	X O	X O *1	
Pitch Bend		O	O *1	
Control Change	0,32 1,7,10,11 6,38 64 65 66 71-75 91,93 96-97 100-101 1-95	O O X O X X O O X X O	O *1 O *1 O *1 O *1 O *1 O *1 O *1 O *1 O *1 O *1 O *1	Bank Select Data Entry Sustain Sw Portamento Sw Sostenuto Sound Controller Effect Depth RPN Inc,Dec RPN LSB,MSB Assignable Cntrl
Prog Change : True #		O 0 - 127 **********	O 0 - 127 0 - 127	
System Exclusive		O	O	
Common	: Song Pos. : Song Sel. : Tune	X X X	X X X	
System Real Time	: Clock : Commands	X X	O X	
Aux Mes-sages	: All Sound Off : Reset All Cntrls : Local ON/OFF : All Notes OFF : Active Sense : Reset	X X X X O X	O (120,126,127) O (121) X O (123-125) O X	

Notes: *1 if receive switch is on.
*2 m is always treated as "1" regardless of its value.

Mode 1 : OMNI ON , POLY Mode 2 : OMNI ON ,MONO O : Yes
Mode 3 : OMNI OFF, POLY Mode 4 : OMNI OFF,MONO X : No

U.R.G., Pro Audio & Digital Musical Instrument Division, Yamaha Corporation
© 2005 Yamaha Corporation

WF68560 510MWCP6.3-01A0
Printed in Japan

This document is printed on chlorine free (ECF) paper with soy ink.